Sonoma Dothan EAL50_1
LA2362 Schematic

Security Classification	Compal Secret Data		
Issued Date	2005/03/01	Deciphered Date	2006/03/01

THIS SHEET OF ENGINEERING DRAWING IS THE PROPRIETARY PROPERTY OF COMPAL ELECTRONICS, INC. AND CONTAINS CONFIDENTIAL AND TRADE SECRET INFORMATION. THIS SHEET MAY NOT BE TRANSFERED FROM THE CUSTODY OF THE COMPETENT DIVISION OF R&D DEPARTMENT EXCEPT AS AUTHORIZED BY COMPAL ELECTRONICS, INC. NEITHER THIS SHEET NOR THE INFORMATION IT CONTAINS MAY BE USED BY OR DISCLOSED TO ANY THIRD PARTY WITHOUT PRIOR WRITTEN CONSENT OF COMPAL ELECTRONICS, INC.

Title	<Title>	
Size Custom	Document Number LA-2362	Rev 1
Date: Friday, March 11, 2005	Sheet 1 of 52	

Compal confidential

Block Diagram

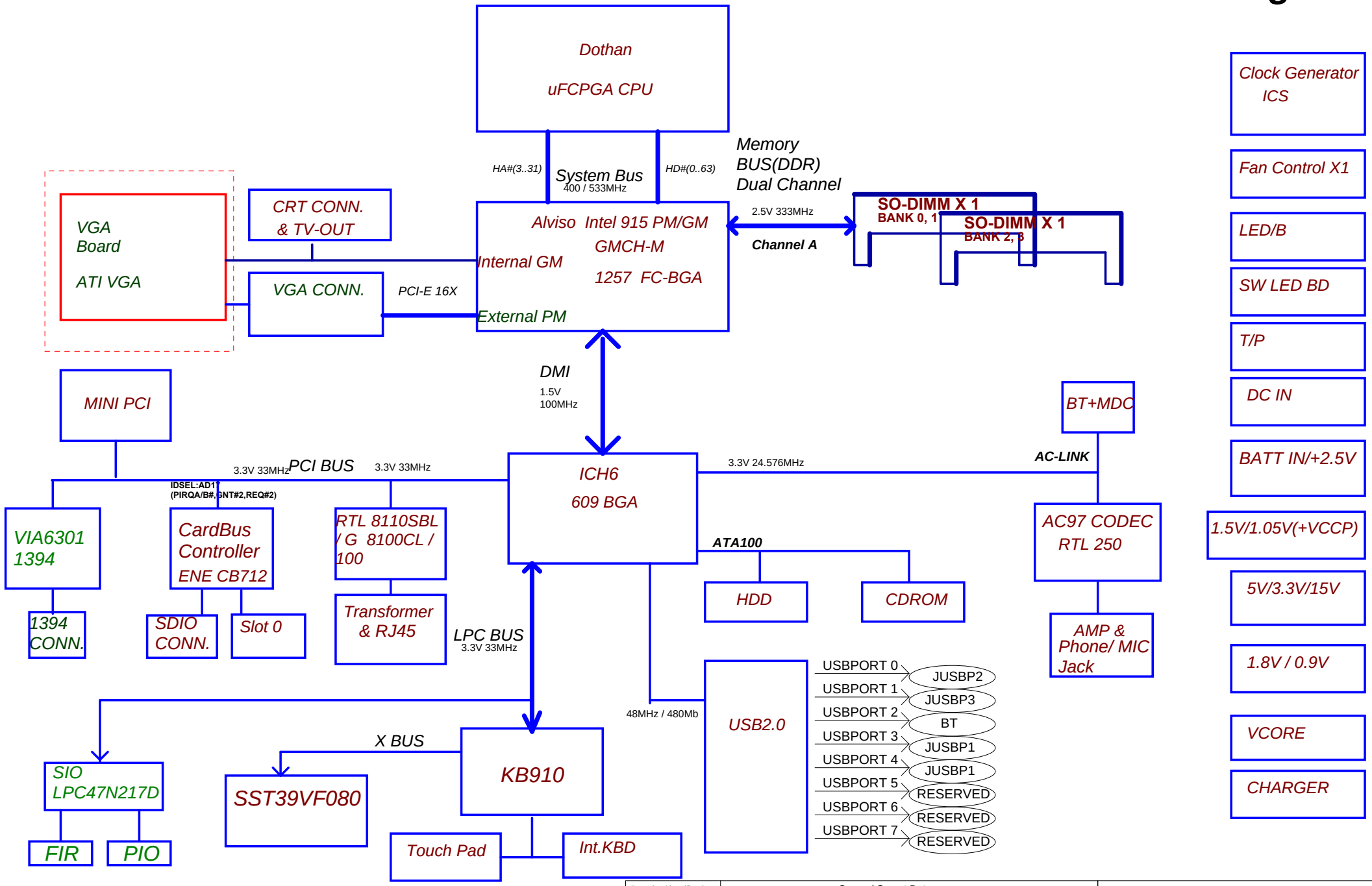

Security Classification	Compal Secret Data		
Issued Date	2005/03/01	Deciphered Date	2006/03/01

THIS SHEET OF ENGINEERING DRAWING IS THE PROPRIETARY PROPERTY OF COMPAL ELECTRONICS, INC. AND CONTAINS CONFIDENTIAL AND TRADE SECRET INFORMATION. THIS SHEET MAY NOT BE TRANSFERED FROM THE CUSTODY OF THE COMPETENT DIVISION OF R&D DEPARTMENT EXCEPT AS AUTHORIZED BY COMPAL ELECTRONICS, INC. NEITHER THIS SHEET NOR THE INFORMATION IT CONTAINS MAY BE USED BY OR DISCLOSED TO ANY THIRD PARTY WITHOUT PRIOR WRITTEN CONSENT OF COMPAL ELECTRONICS, INC.

Title	<Title>		
Size	Document Number		Rev
Custom	LA-2362		1
Date: Friday, March 11, 2005	Sheet 2 of 52		

I2C / SMBUS ADDRESSING

External PCI Devices

DEVICE	IDSEL #	REQ/GNT #	PIRQ
LAN	AD17	0	F
CARD BUS	AD20	1	A
Cardreader			B
1394	AD16	2	E
Wireless LAN(MINI PCI)	AD18	3	G,H

@ Depop
1@ EAL51
2@ EAL50
1@ EAL51 VALUE (DELETE SIO/1394)

Power Managment table

State \ Signal	+12VALW +3VALW +5VALW	+2.5V +3V +5V +12V	+CPU_CORE +VCCP +5VS +3VS +2.5VS +1.8VS +1.25VS +1.5VS
S0	ON	ON	ON
S1	ON	ON	ON
S3	ON	ON	OFF
S5 S4/AC	ON	OFF	OFF
S5 S4/AC don't exist	OFF	OFF	OFF

	PCB Rev	Data
Bringup-Build SST-Build	0.1	
PT-Build		
ST-Build		
QT-Build		

SCHEMATICS VERSION LIST

VERSION	ISSUE DATE	REMARK
0.0A		First Release

Ceramic Capacitor Spec
Guide:

Temperature Characteristics:

Symbol	0	1	2	3	4	5	6	7
CODE	Z5U	Z5V	Z5P	Y5U	Y5V	Y5P	X5R	X7R

8	9	A	B	C	D	E	F	G
NP0	C0G		BJ	CH	CJ	CK	SH	SJ

H	I	J	
UJ	UK	SL	

Tolerance:

Symbol	A	B	C	D	F	G	H	J
CODE	+-0.05PF	+-0.1PF	+-0.25PF	+-0.5PF	+-1PF	+-2%	+-3%	+-5%

K	M	N	P	Q	V	X	Z	
+-10%	+-20%	+-30%	+100,-0%	+30,-10%	+20,-10%	+40,-20%	+80,-20%	

SMBUS Control Table

	SOURCE	INVERTER	BATT	SERIAL EEPROM	THERMAL SENSOR (CPU)	THERMAL SENSOR (LM75)	SODIMM	CLK CHIP	MINI PCI	LCD	VGA Thermal ADM1032
SMB_EC_CK1 SMB_EC_DA1	PC87591L	√	√	√	×	×	×	×	×	×	×
SMB_EC_CK2 SMB_EC_DA2	PC87591L	×	×	×	√	√	×	×	×	×	√
ICH_SMBCLK ICH_SMBDATA	ICH6-M	×	×	×	×	×	√	√	×	×	×
LCD_DDCCLK LCD_DDCDATA	Alviso GM-GP	×	×	×	×	×	×	×	×	√	×

THIS SHEET OF ENGINEERING DRAWING IS THE PROPRIETARY PROPERTY OF COMPAL ELECTRONICS, INC. AND CONTAINS CONFIDENTIAL AND TRADE SECRET INFORMATION. THIS SHEET MAY NOT BE TRANSFERED FROM THE CUSTODY OF THE COMPETENT DIVISION OF R&D DEPARTMENT EXCEPT AS AUTHORIZED BY COMPAL ELECTRONICS, INC. NEITHER THIS SHEET NOR THE INFORMATION IT CONTAINS MAY BE USED BY OR DISCLOSED TO ANY THIRD PARTY WITHOUT PRIOR WRITTEN CONSENT OF COMPAL ELECTRONICS, INC.

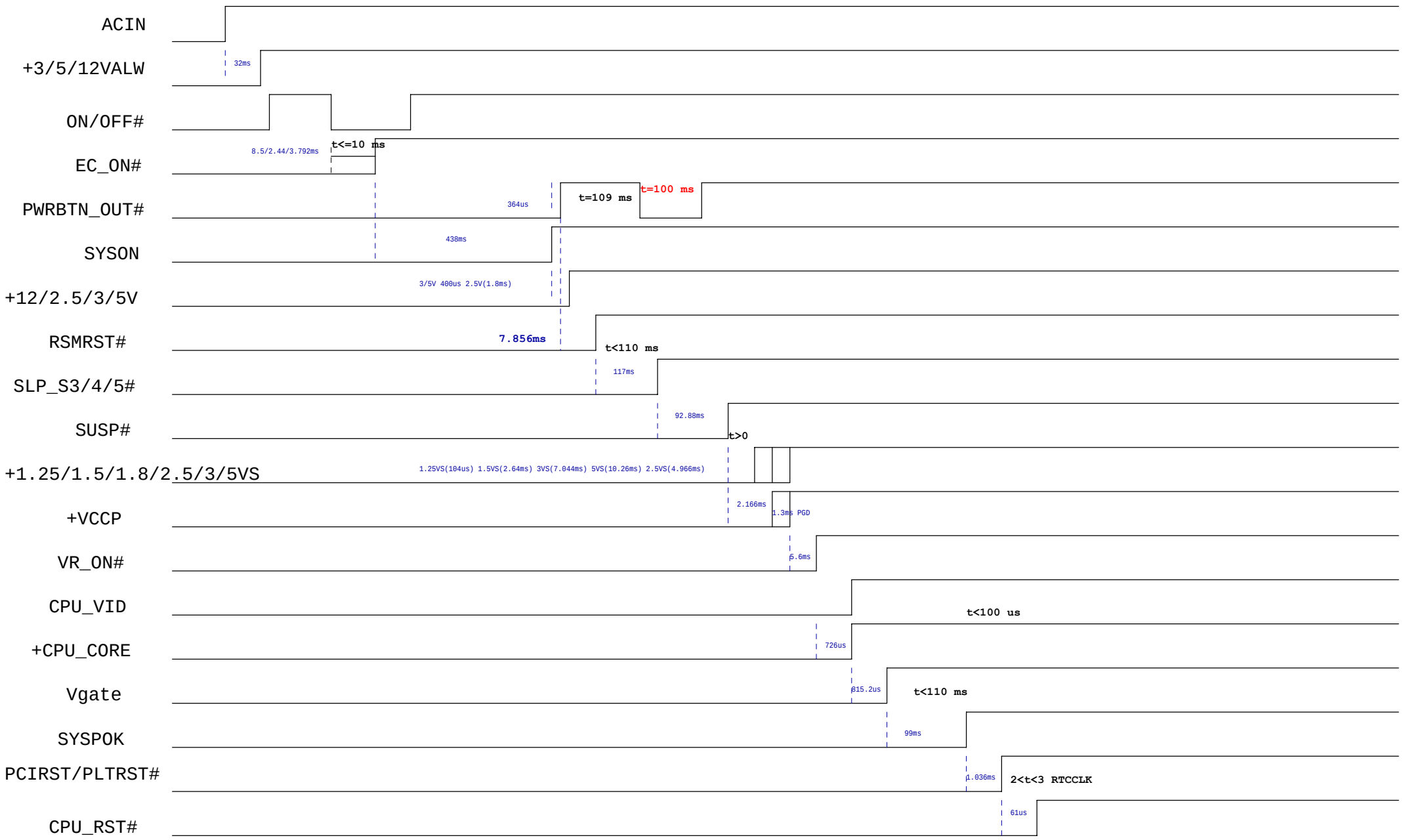

Security Classification	Compal Secret Data		
Issued Date	2005/03/01	Deciphered Date	2006/03/01

THIS SHEET OF ENGINEERING DRAWING IS THE PROPRIETARY PROPERTY OF COMPAL ELECTRONICS, INC. AND CONTAINS CONFIDENTIAL AND TRADE SECRET INFORMATION. THIS SHEET MAY NOT BE TRANSFERED FROM THE CUSTODY OF THE COMPETENT DIVISION OF R&D DEPARTMENT EXCEPT AS AUTHORIZED BY COMPAL ELECTRONICS, INC. NEITHER THIS SHEET NOR THE INFORMATION IT CONTAINS MAY BE USED BY OR DISCLOSED TO ANY THIRD PARTY WITHOUT PRIOR WRITTEN CONSENT OF COMPAL ELECTRONICS, INC.

Title: <Title>

Size: Custom | Document Number: LA-2362 | Rev: 1

Date: Friday, March 11, 2005 | Sheet 4 of 52

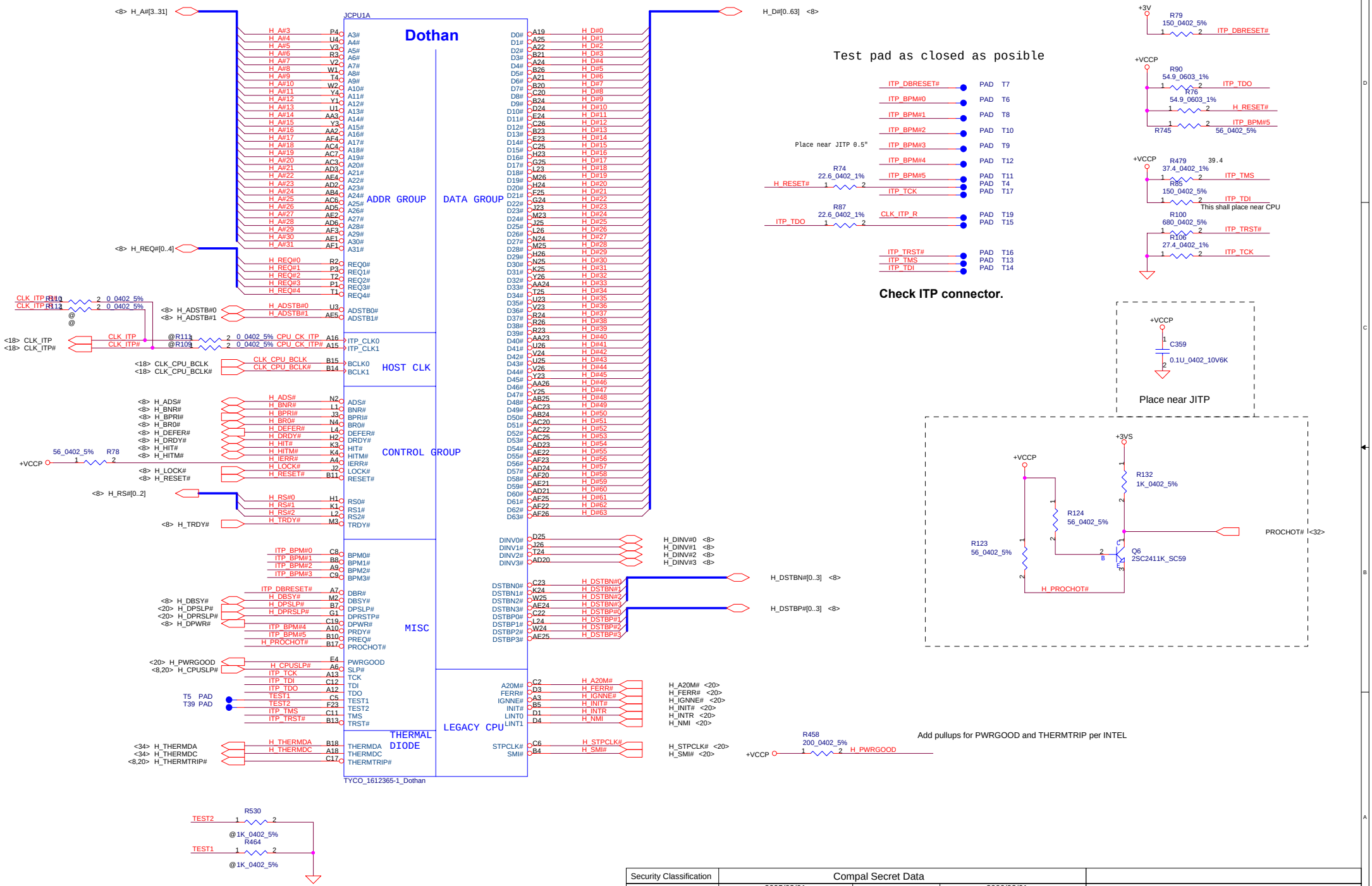

Security Classification	Compal Secret Data		
Issued Date	2005/03/01	Deciphered Date	2006/03/01

Title: <Title>

Size: Custom | Document Number: LA-2362 | Rev: 1

Date: Friday, March 11, 2005 | Sheet 5 of 52

THIS SHEET OF ENGINEERING DRAWING IS THE PROPRIETARY PROPERTY OF COMPAL ELECTRONICS, INC. AND CONTAINS CONFIDENTIAL AND TRADE SECRET INFORMATION. THIS SHEET MAY NOT BE TRANSFERED FROM THE CUSTODY OF THE COMPETENT DIVISION OF R&D DEPARTMENT EXCEPT AS AUTHORIZED BY COMPAL ELECTRONICS, INC. NEITHER THIS SHEET NOR THE INFORMATION IT CONTAINS MAY BE USED BY OR DISCLOSED TO ANY THIRD PARTY WITHOUT PRIOR WRITTEN CONSENT OF COMPAL ELECTRONICS, INC.

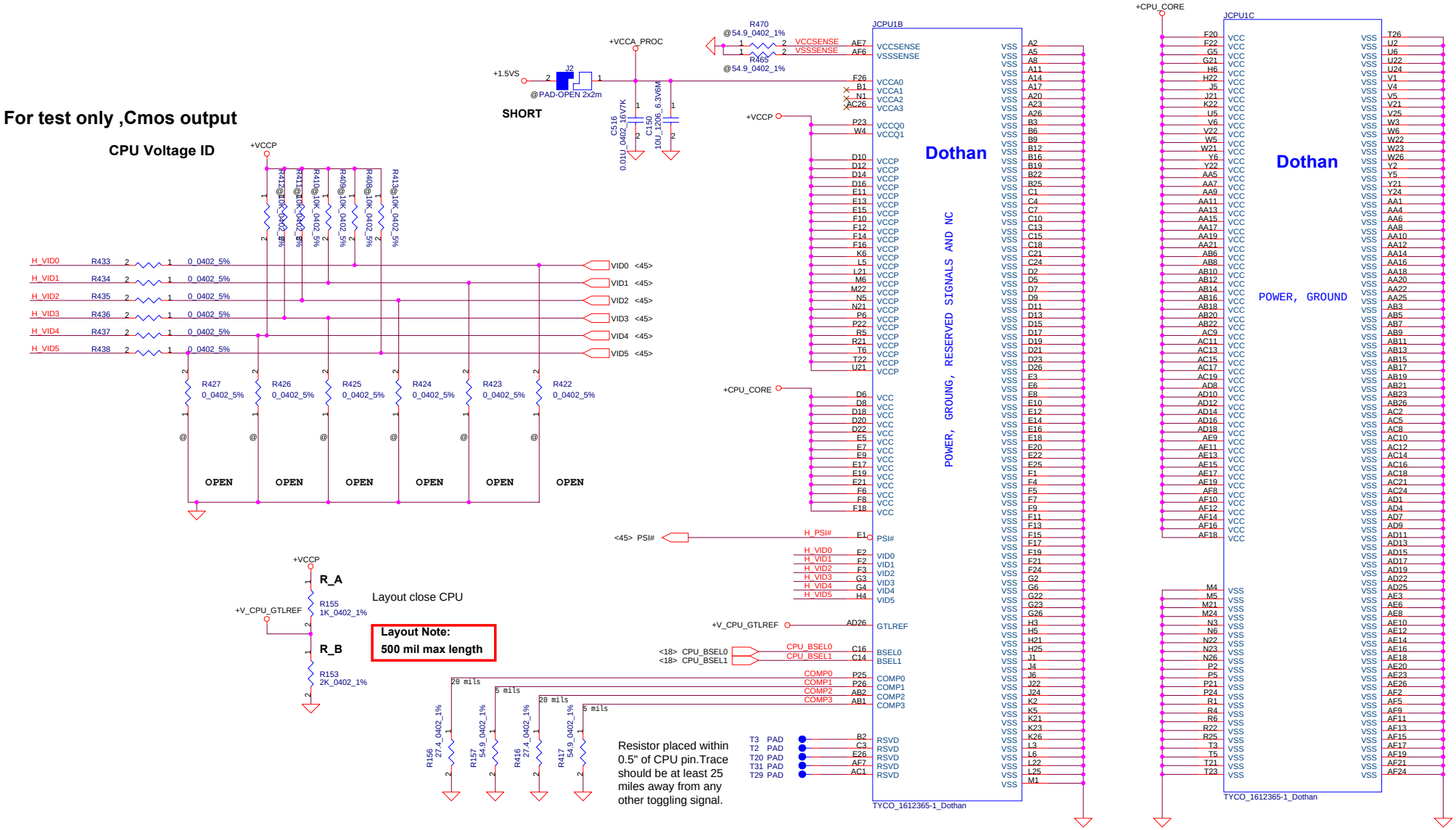

Security Classification	Compal Secret Data			Title <Title>
Issued Date	2005/03/01	Deciphered Date	2006/03/01	
				Size Document Number Rev
				Custom LA-2362 1
				Date: Friday, March 11, 2005 Sheet 6 of 52

THIS SHEET OF ENGINEERING DRAWING IS THE PROPRIETARY PROPERTY OF COMPAL ELECTRONICS, INC. AND CONTAINS CONFIDENTIAL AND TRADE SECRET INFORMATION. THIS SHEET MAY NOT BE TRANSFERED FROM THE CUSTODY OF THE COMPETENT DIVISION OF R&D DEPARTMENT EXCEPT AS AUTHORIZED BY COMPAL ELECTRONICS, INC. NEITHER THIS SHEET NOR THE INFORMATION IT CONTAINS MAY BE USED BY OR DISCLOSED TO ANY THIRD PARTY WITHOUT PRIOR WRITTEN CONSENT OF COMPAL ELECTRONICS, INC.

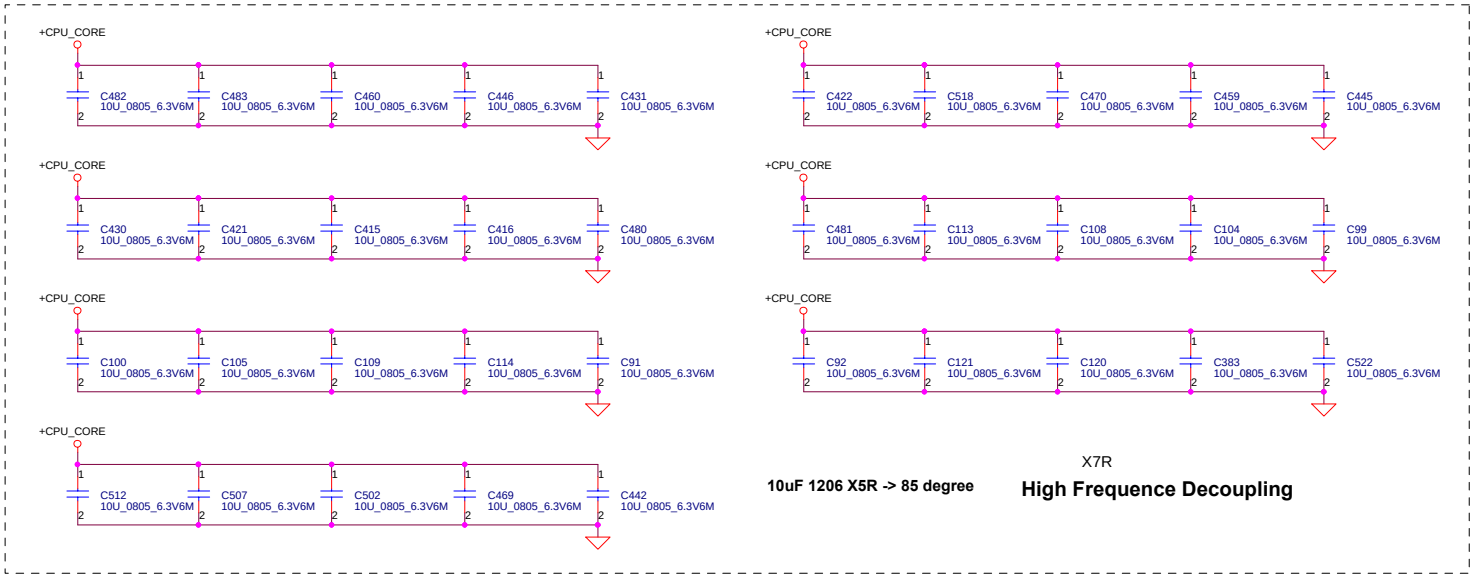

Near VCORE regulator.

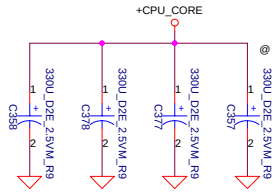

ESR <= 3m ohm

Capacitor > 880 uF

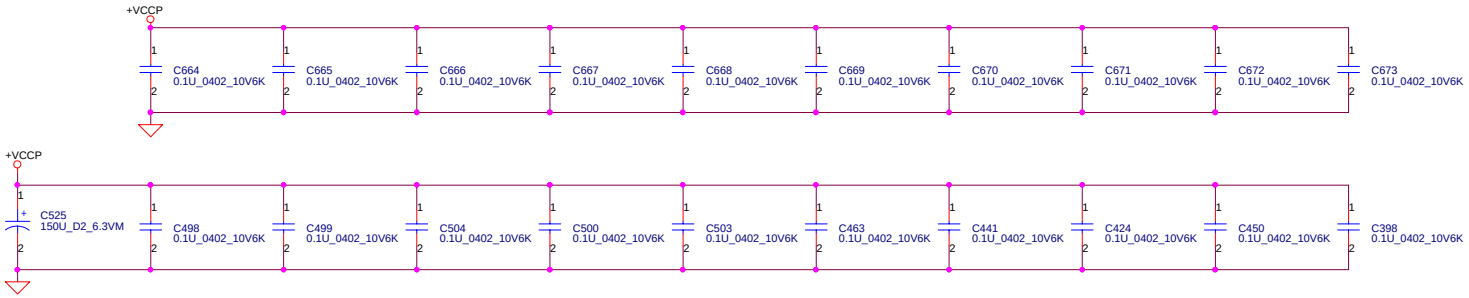

Security Classification	Compal Secret Data		
Issued Date	2005/03/01	Deciphered Date	2006/03/01

THIS SHEET OF ENGINEERING DRAWING IS THE PROPRIETARY PROPERTY OF COMPAL ELECTRONICS, INC. AND CONTAINS CONFIDENTIAL AND TRADE SECRET INFORMATION. THIS SHEET MAY NOT BE TRANSFERED FROM THE CUSTODY OF THE COMPETENT DIVISION OF R&D DEPARTMENT EXCEPT AS AUTHORIZED BY COMPAL ELECTRONICS, INC. NEITHER THIS SHEET NOR THE INFORMATION IT CONTAINS MAY BE USED BY OR DISCLOSED TO ANY THIRD PARTY WITHOUT PRIOR WRITTEN CONSENT OF COMPAL ELECTRONICS, INC.

Title: <Title>

Size: Custom | Document Number: LA-2362 | Rev: 1

Date: Friday, March 11, 2005 | Sheet 7 of 52

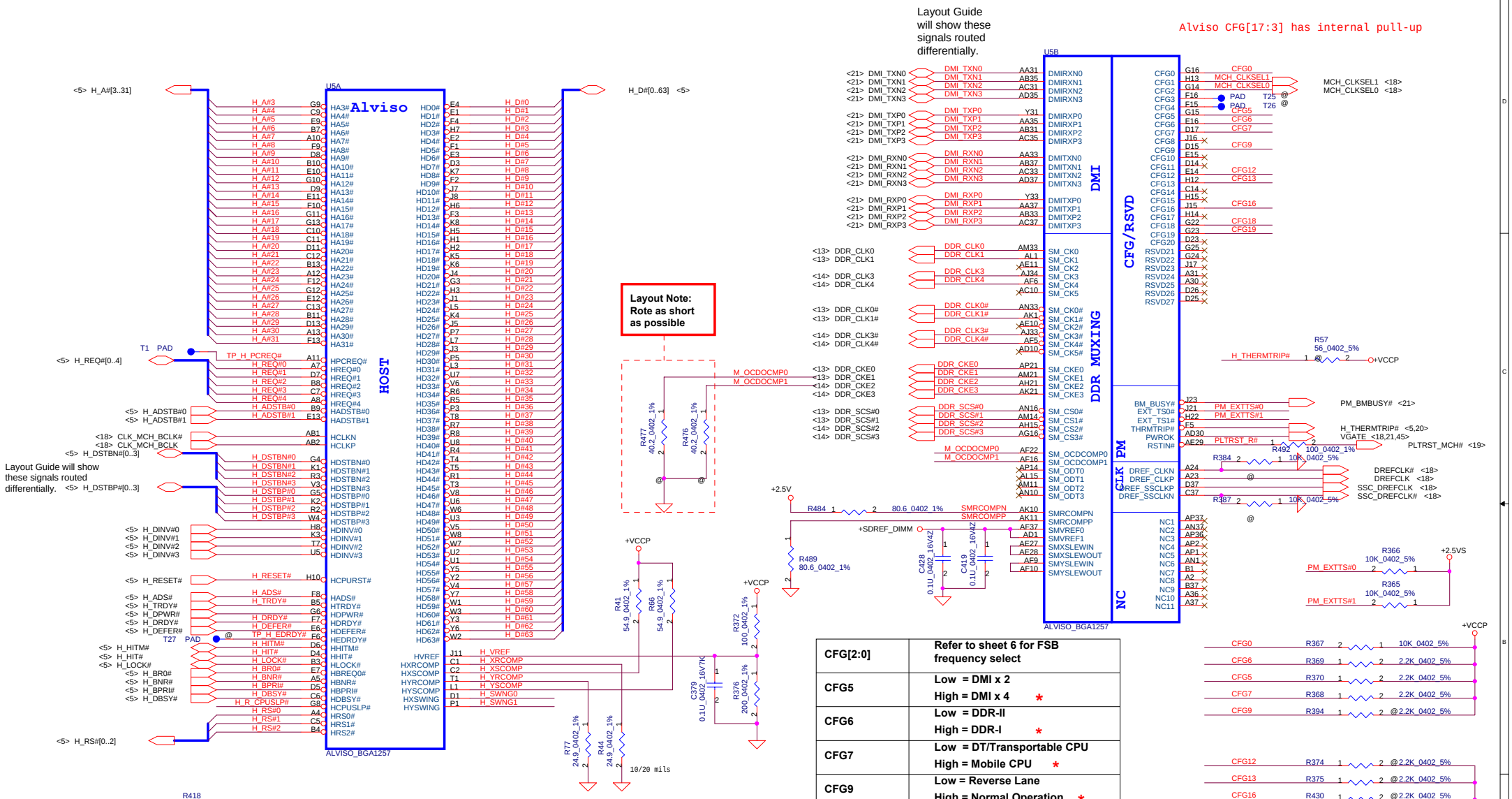

CFG[2:0]	Refer to sheet 6 for FSB frequency select
CFG5	Low = DMI x 2 High = DMI x 4 *
CFG6	Low = DDR-II High = DDR-I *
CFG7	Low = DT/Transportable CPU High = Mobile CPU *
CFG9	Low = Reverse Lane High = Normal Operation *
CFG[13:12]	00 = Reserved 01 = XOR Mode Enabled 10 = All Z Mode Enabled 11 = Normal Operation (Default) *
CFG16 (FSB Dynamic ODT)	Low = Disabled High = Enabled *
CFG18 (VCC Select)	Low = 1.05V (Default) * High = 1.5V
CFG19 (VTT Select)	Low = 1.05V (Default) * High = 1.2V

Note:
"Do not install R for Dothan-A, Install R97 for Dothan-B"

Security Classification	Compal Secret Data		
Issued Date	2005/03/01	Deciphered Date	2006/03/01

THIS SHEET OF ENGINEERING DRAWING IS THE PROPRIETARY PROPERTY OF COMPAL ELECTRONICS, INC. AND CONTAINS CONFIDENTIAL AND TRADE SECRET INFORMATION. THIS SHEET MAY NOT BE TRANSFERRED FROM THE CUSTODY OF THE COMPETENT DIVISION OF R&D DEPARTMENT EXCEPT AS AUTHORIZED BY COMPAL ELECTRONICS, INC. NEITHER THIS SHEET NOR THE INFORMATION IT CONTAINS MAY BE USED BY OR DISCLOSED TO ANY THIRD PARTY WITHOUT PRIOR WRITTEN CONSENT OF COMPAL ELECTRONICS, INC.

Title: <Title>

Size: Custom | Document Number: LA-2362 | Rev: 1

Date: Friday, March 11, 2005 | Sheet 8 of 52

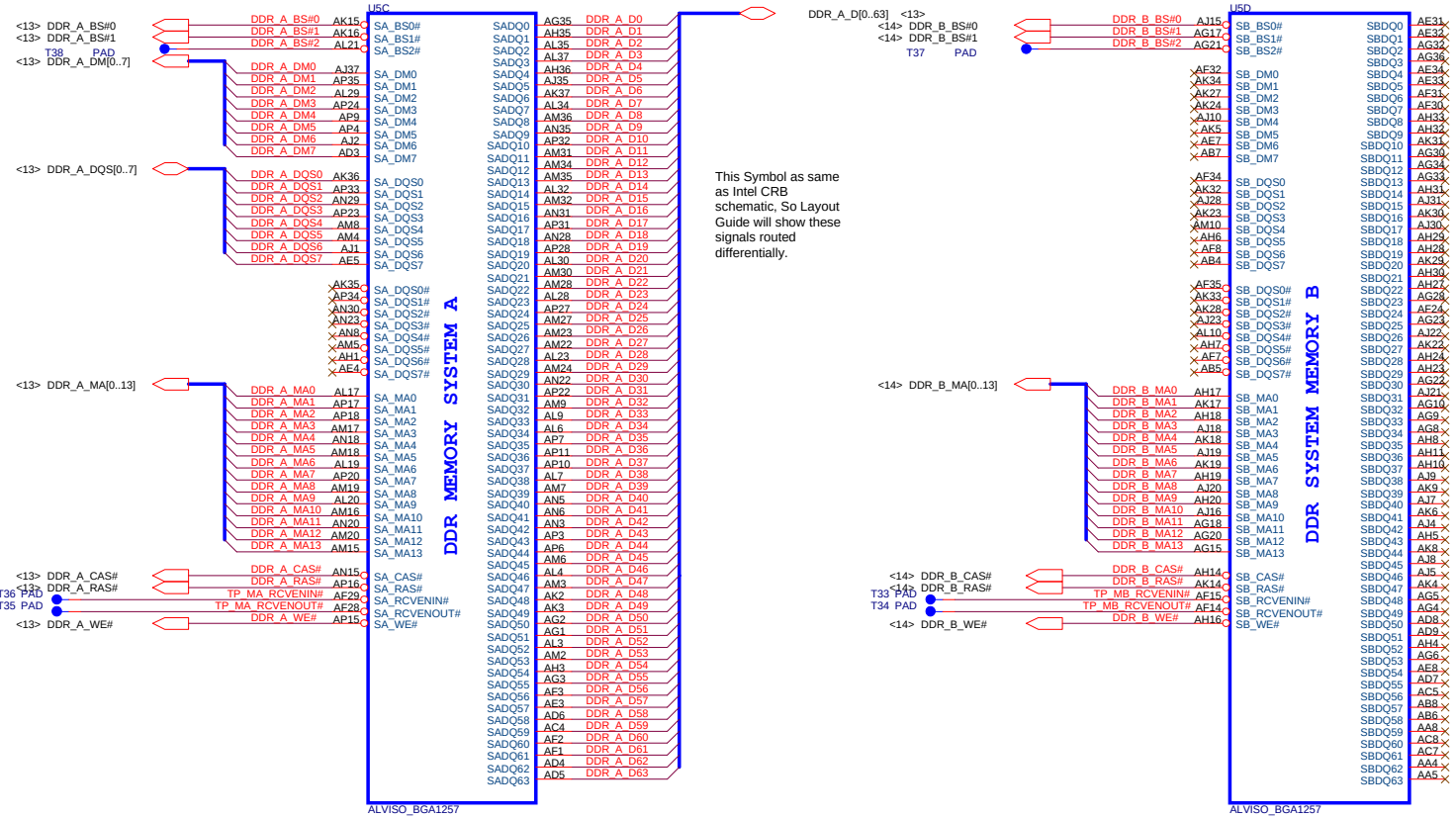

Security Classification	Compal Secret Data			
Issued Date	2005/03/01	Deciphered Date	2006/03/01	Title <Title>

THIS SHEET OF ENGINEERING DRAWING IS THE PROPRIETARY PROPERTY OF COMPAL ELECTRONICS, INC. AND CONTAINS CONFIDENTIAL AND TRADE SECRET INFORMATION. THIS SHEET MAY NOT BE TRANSFERED FROM THE CUSTODY OF THE COMPETENT DIVISION OF R&D DEPARTMENT EXCEPT AS AUTHORIZED BY COMPAL ELECTRONICS, INC. NEITHER THIS SHEET NOR THE INFORMATION IT CONTAINS MAY BE USED BY OR DISCLOSED TO ANY THIRD PARTY WITHOUT PRIOR WRITTEN CONSENT OF COMPAL ELECTRONICS, INC.

Size	Document Number	Rev
Custom	LA-2362	1

Date: Friday, March 11, 2005 Sheet 9 of 52

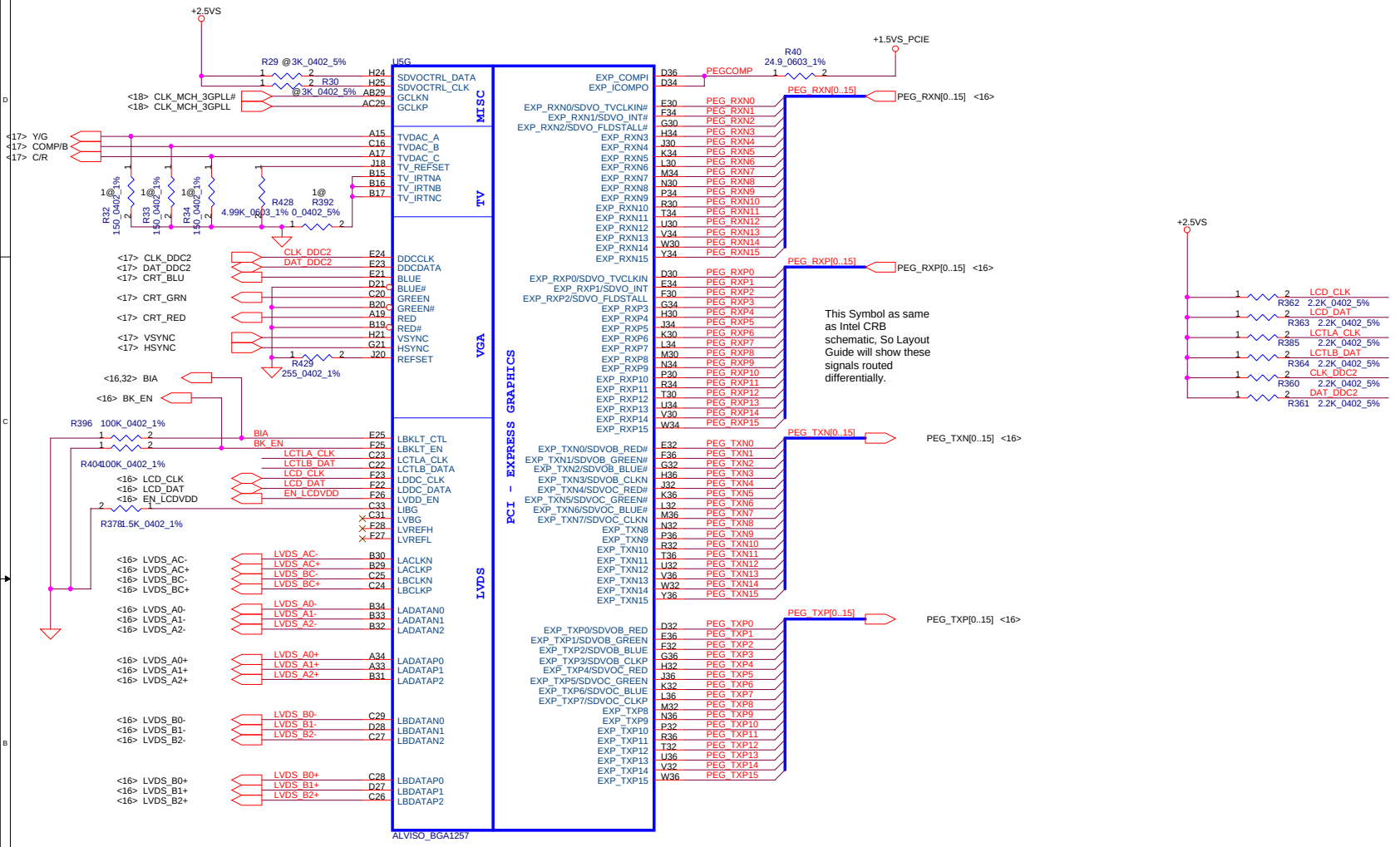

Security Classification	Compal Secret Data		
Issued Date	2005/03/01	Deciphered Date	2006/03/01

THIS SHEET OF ENGINEERING DRAWING IS THE PROPRIETARY PROPERTY OF COMPAL ELECTRONICS, INC. AND CONTAINS CONFIDENTIAL AND TRADE SECRET INFORMATION. THIS SHEET MAY NOT BE TRANSFERED FROM THE CUSTODY OF THE COMPETENT DIVISION OF R&D DEPARTMENT EXCEPT AS AUTHORIZED BY COMPAL ELECTRONICS, INC. NEITHER THIS SHEET NOR THE INFORMATION IT CONTAINS MAY BE USED BY OR DISCLOSED TO ANY THIRD PARTY WITHOUT PRIOR WRITTEN CONSENT OF COMPAL ELECTRONICS, INC.

Title: <Title>

Size: Custom | Document Number: LA-2362 | Rev: 1

Date: Friday, March 11, 2005 | Sheet 10 of 52

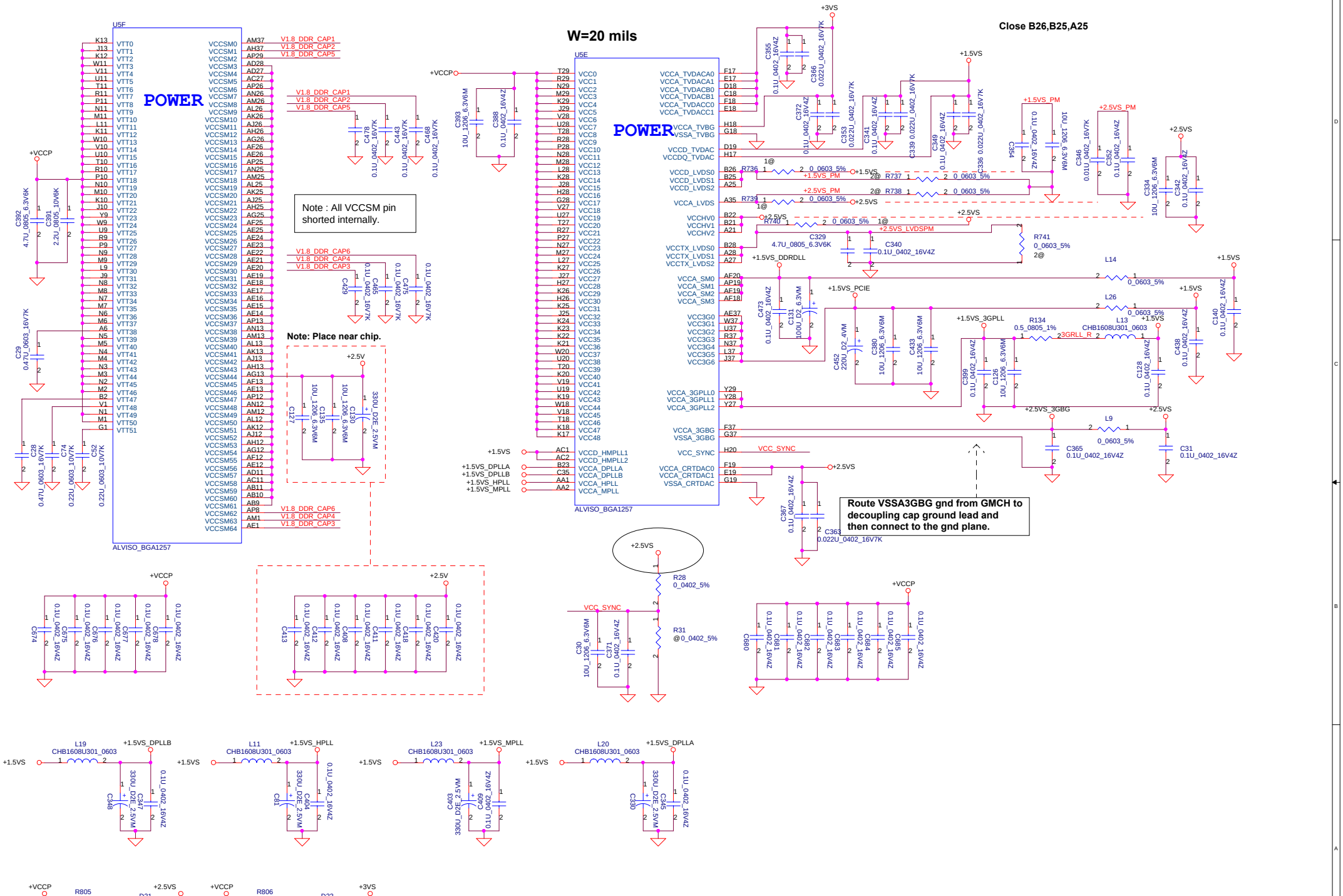

Security Classification	Compal Secret Data		
Issued Date	2005/03/01	Deciphered Date	2006/03/01

THIS SHEET OF ENGINEERING DRAWING IS THE PROPRIETARY PROPERTY OF COMPAL ELECTRONICS, INC. AND CONTAINS CONFIDENTIAL AND TRADE SECRET INFORMATION. THIS SHEET MAY NOT BE TRANSFERED FROM THE CUSTODY OF THE COMPETENT DIVISION OF R&D DEPARTMENT EXCEPT AS AUTHORIZED BY COMPAL ELECTRONICS, INC. NEITHER THIS SHEET NOR THE INFORMATION IT CONTAINS MAY BE USED BY OR DISCLOSED TO ANY THIRD PARTY WITHOUT PRIOR WRITTEN CONSENT OF COMPAL ELECTRONICS, INC.

Title: <Title>

Size: Custom | Document Number: LA-2362 | Rev: 1

Date: Friday, March 11, 2005 | Sheet 11 of 52

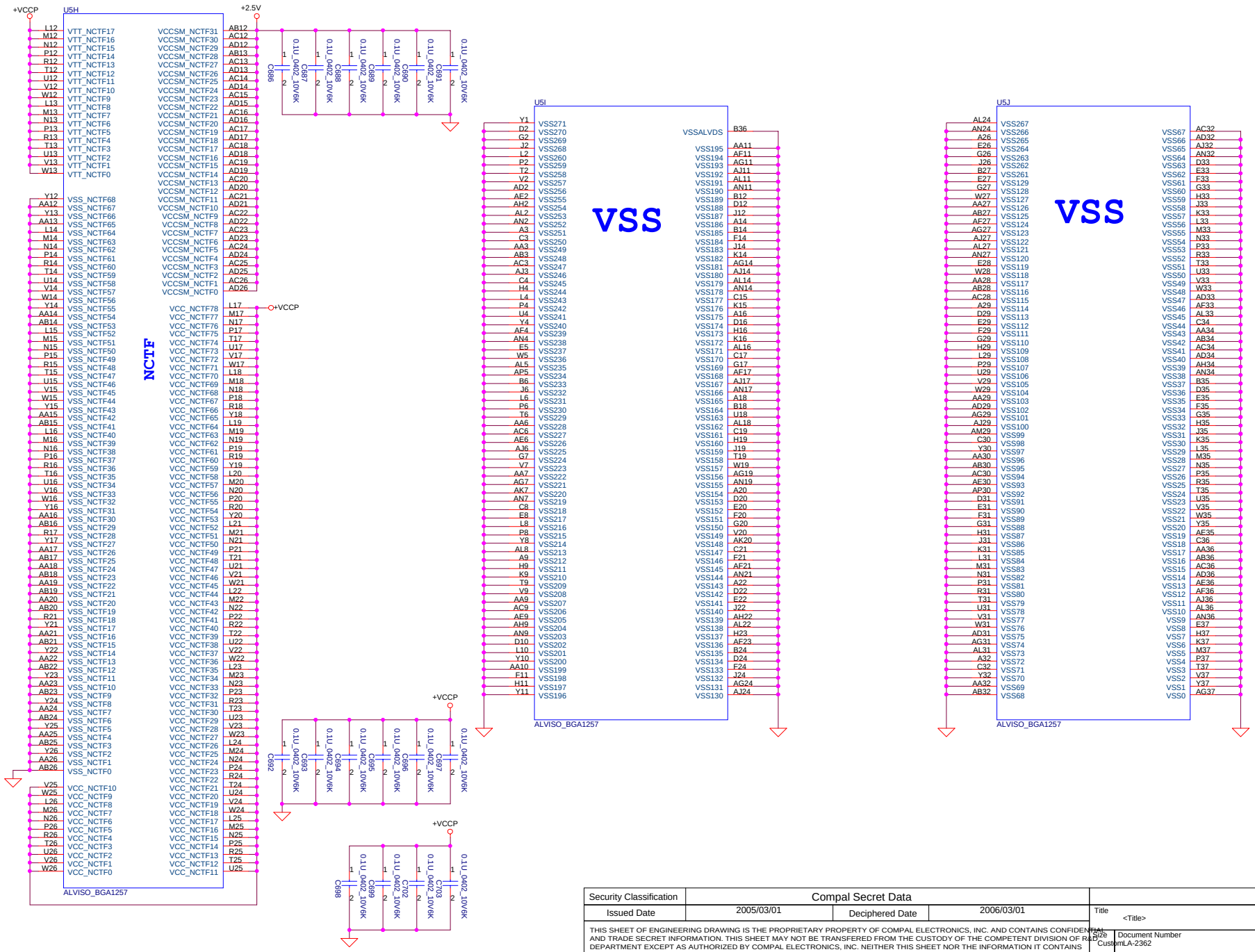

Security Classification	Compal Secret Data		
Issued Date	2005/03/01	Deciphered Date	2006/03/01

Title: <Title>

Size: Custom | Document Number: LA-2362 | Rev: 1

Date: Friday, March 11, 2005 | Sheet 12 of 52

THIS SHEET OF ENGINEERING DRAWING IS THE PROPRIETARY PROPERTY OF COMPAL ELECTRONICS, INC. AND CONTAINS CONFIDENTIAL AND TRADE SECRET INFORMATION. THIS SHEET MAY NOT BE TRANSFERED FROM THE CUSTODY OF THE COMPETENT DIVISION OF R&D DEPARTMENT EXCEPT AS AUTHORIZED BY COMPAL ELECTRONICS, INC. NEITHER THIS SHEET NOR THE INFORMATION IT CONTAINS MAY BE USED BY OR DISCLOSED TO ANY THIRD PARTY WITHOUT PRIOR WRITTEN CONSENT OF COMPAL ELECTRONICS, INC.

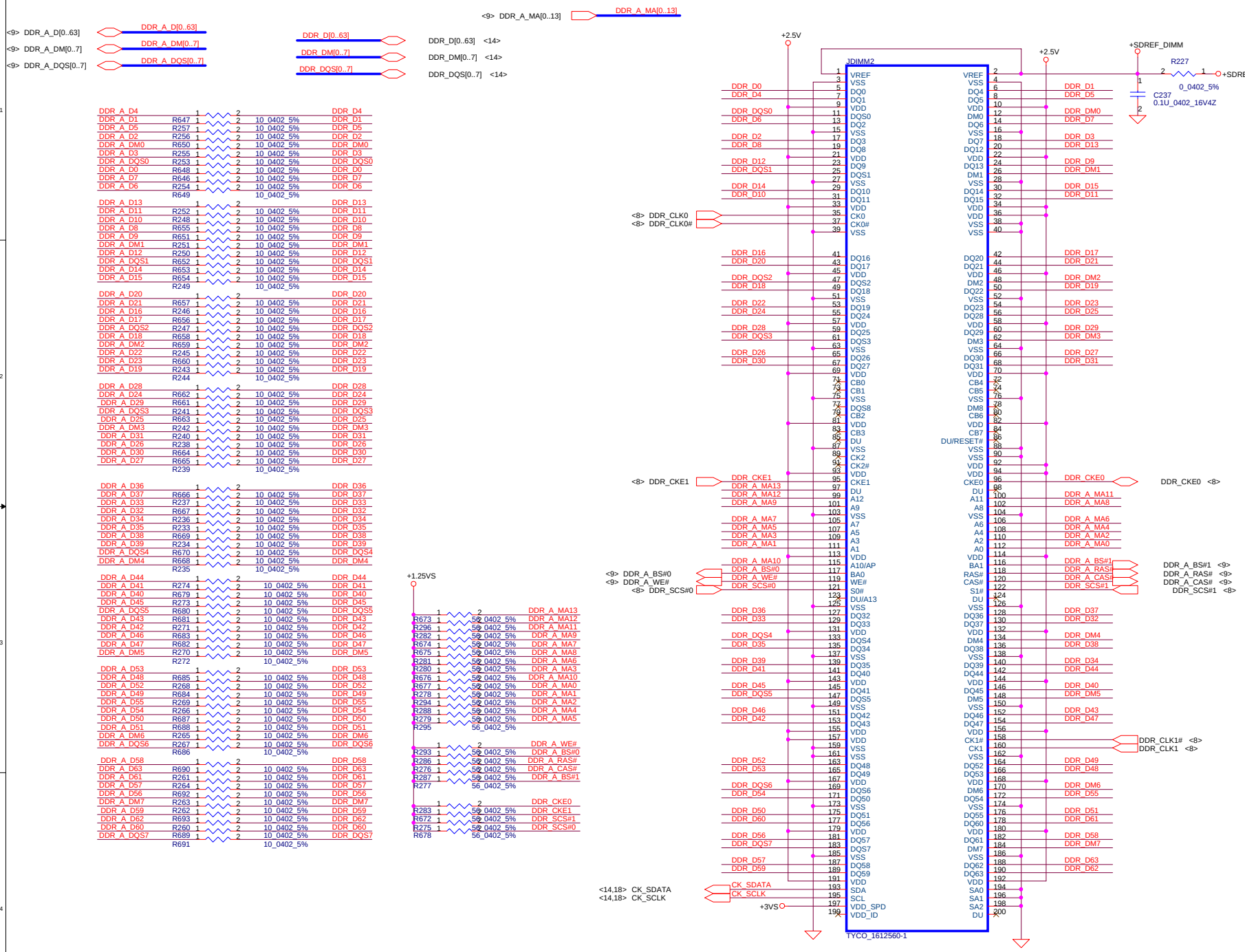

Security Classification	Compal Secret Data		
Issued Date	2005/03/01	Deciphered Date	2006/03/01

Title: <Title>

THIS SHEET OF ENGINEERING DRAWING IS THE PROPRIETARY PROPERTY OF COMPAL ELECTRONICS, INC. AND CONTAINS CONFIDENTIAL AND TRADE SECRET INFORMATION. THIS SHEET MAY NOT BE TRANSFERRED FROM THE CUSTODY OF THE COMPETENT DIVISION OF R&D DEPARTMENT EXCEPT AS AUTHORIZED BY COMPAL ELECTRONICS, INC. NEITHER THIS SHEET NOR THE INFORMATION IT CONTAINS MAY BE USED BY OR DISCLOSED TO ANY THIRD PARTY WITHOUT PRIOR WRITTEN CONSENT OF COMPAL ELECTRONICS, INC.

Size	Document Number	Rev
B	LA-2362	1

Date: Friday, March 11, 2005 Sheet 13 of 52

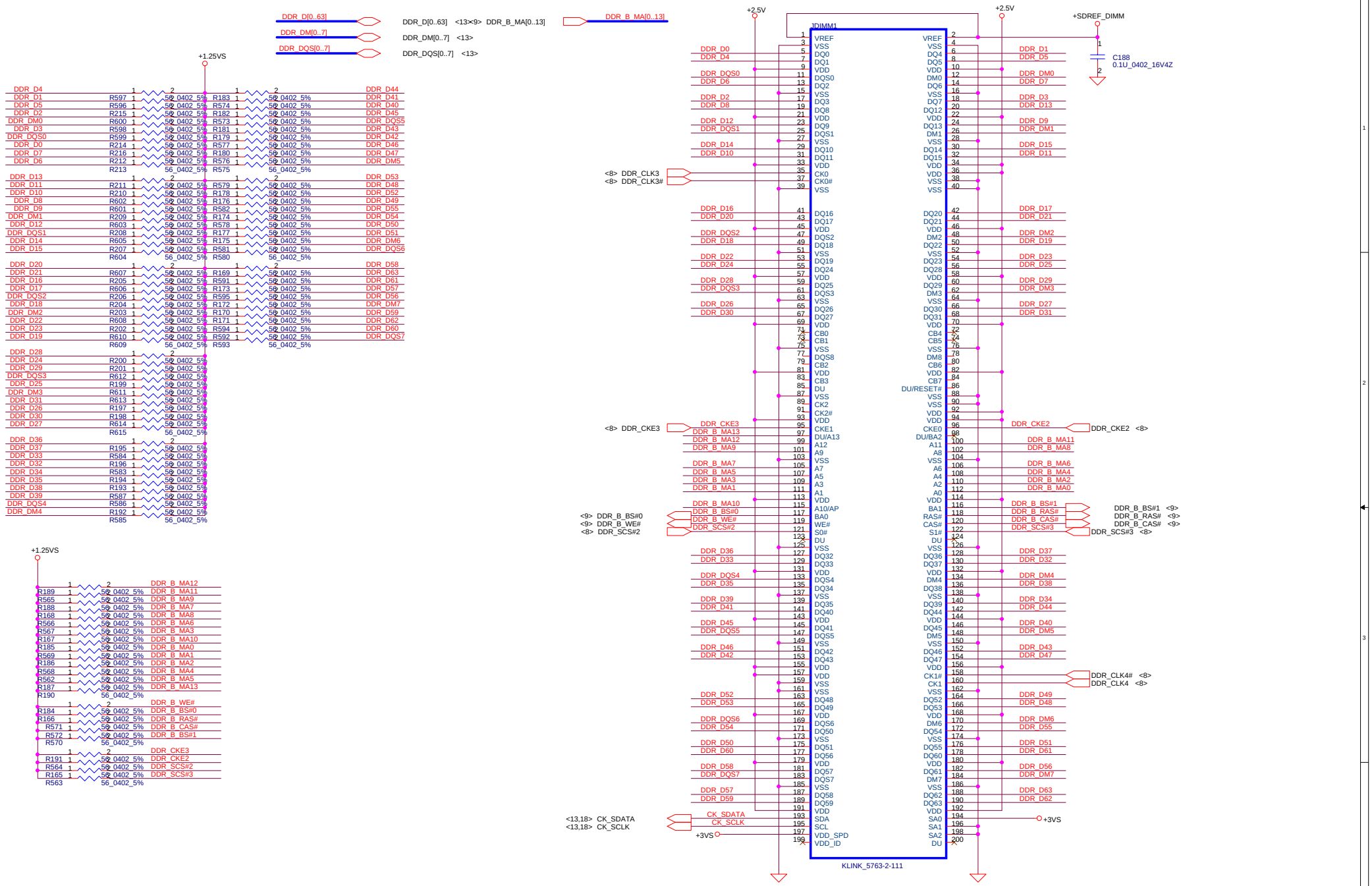

Security Classification	Compal Secret Data		
Issued Date	2005/03/01	Deciphered Date	2006/03/01

THIS SHEET OF ENGINEERING DRAWING IS THE PROPRIETARY PROPERTY OF COMPAL ELECTRONICS, INC. AND CONTAINS CONFIDENTIAL AND TRADE SECRET INFORMATION. THIS SHEET MAY NOT BE TRANSFERED FROM THE CUSTODY OF THE COMPETENT DIVISION OF R&D DEPARTMENT EXCEPT AS AUTHORIZED BY COMPAL ELECTRONICS, INC. NEITHER THIS SHEET NOR THE INFORMATION IT CONTAINS MAY BE USED BY OR DISCLOSED TO ANY THIRD PARTY WITHOUT PRIOR WRITTEN CONSENT OF COMPAL ELECTRONICS, INC.

Title: <Title>

Size: B | Document Number: LA-2362 | Rev: 1

Date: Friday, March 11, 2005 | Sheet 14 of 52

Layout note :

Distribute as close as possible to DDR-SODIMM.

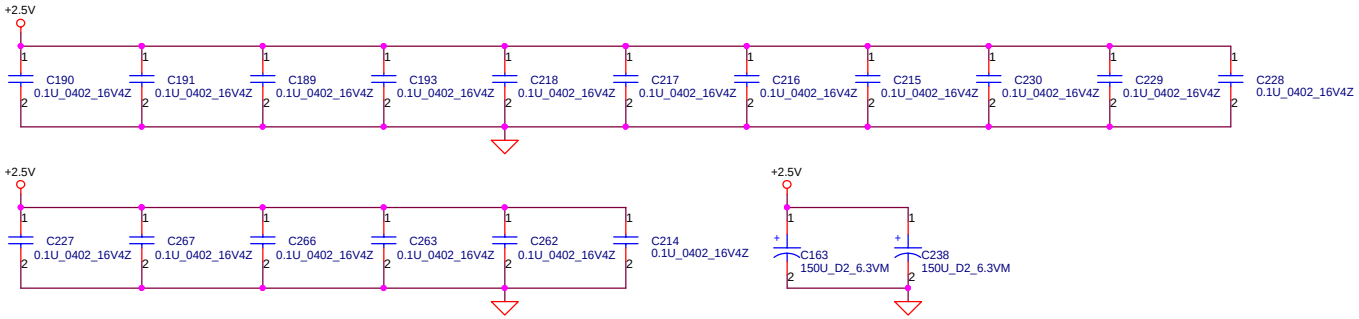

Layout note :

Place one cap close to every 2 pull up resistors termination to +1.25V

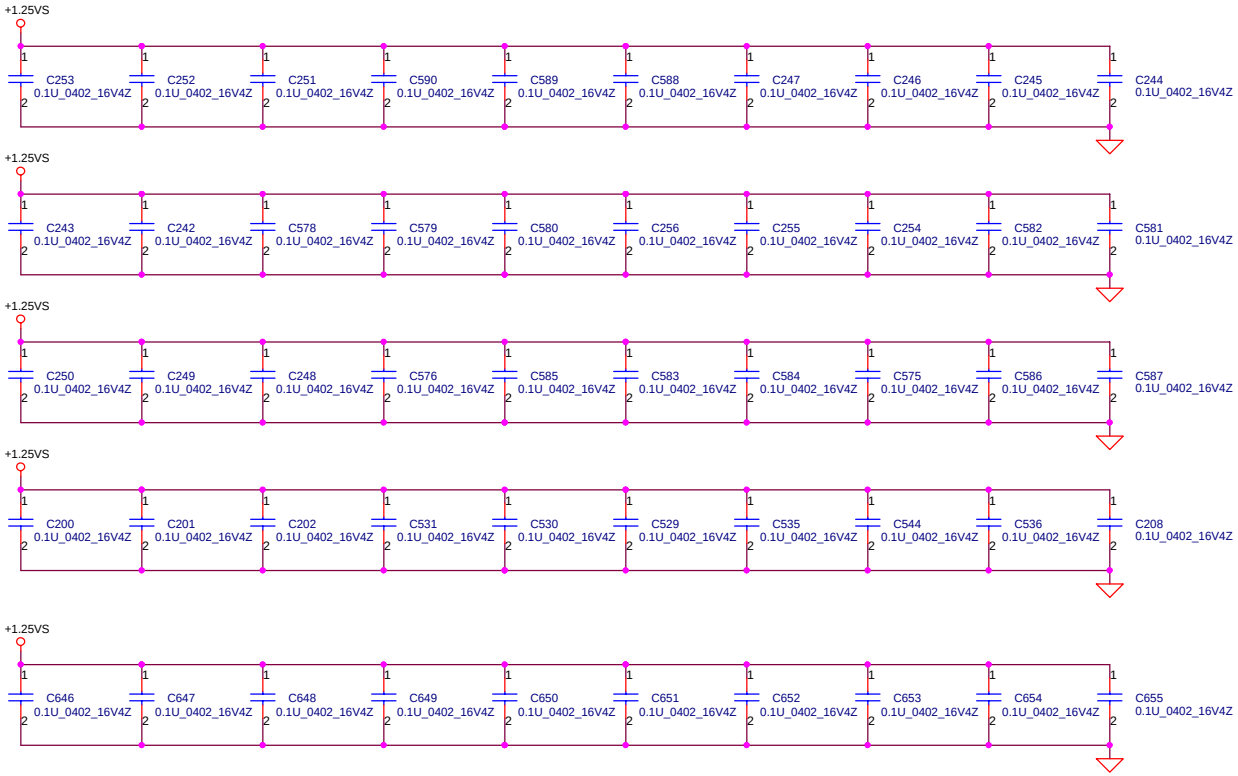

Security Classification	Compal Secret Data		
Issued Date	2005/03/01	Deciphered Date	2006/03/01

THIS SHEET OF ENGINEERING DRAWING IS THE PROPRIETARY PROPERTY OF COMPAL ELECTRONICS, INC. AND CONTAINS CONFIDENTIAL AND TRADE SECRET INFORMATION. THIS SHEET MAY NOT BE TRANSFERED FROM THE CUSTODY OF THE COMPETENT DIVISION OF R&D DEPARTMENT EXCEPT AS AUTHORIZED BY COMPAL ELECTRONICS, INC. NEITHER THIS SHEET NOR THE INFORMATION IT CONTAINS MAY BE USED BY OR DISCLOSED TO ANY THIRD PARTY WITHOUT PRIOR WRITTEN CONSENT OF COMPAL ELECTRONICS, INC.

Title: <Title>

Size: Custom | Document Number: LA-2362 | Rev: 1

Date: Friday, March 11, 2005 | Sheet 15 of 52

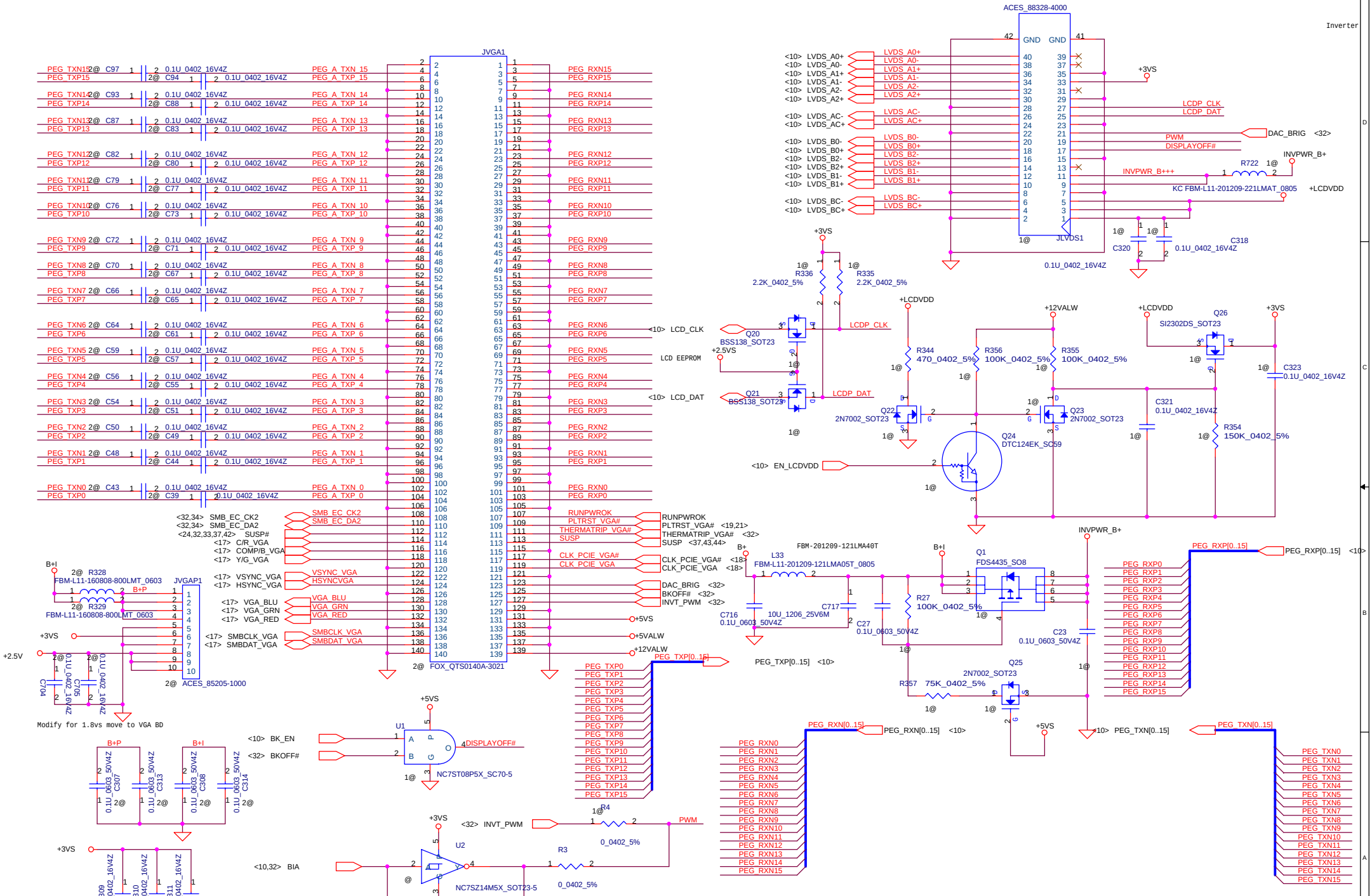

Security Classification	Compal Secret Data		
Issued Date	2005/03/01	Deciphered Date	2006/03/01

THIS SHEET OF ENGINEERING DRAWING IS THE PROPRIETARY PROPERTY OF COMPAL ELECTRONICS, INC. AND CONTAINS CONFIDENTIAL AND TRADE SECRET INFORMATION. THIS SHEET MAY NOT BE TRANSFERED FROM THE CUSTODY OF THE COMPETENT DIVISION OF R&D DEPARTMENT EXCEPT AS AUTHORIZED BY COMPAL ELECTRONICS, INC. NEITHER THIS SHEET NOR THE INFORMATION IT CONTAINS MAY BE USED BY OR DISCLOSED TO ANY THIRD PARTY WITHOUT PRIOR WRITTEN CONSENT OF COMPAL ELECTRONICS, INC.

Title: <Title>

Size: Custom | Document Number: LA-2362 | Rev: 1

Date: Friday, March 11, 2005 | Sheet 16 of 52

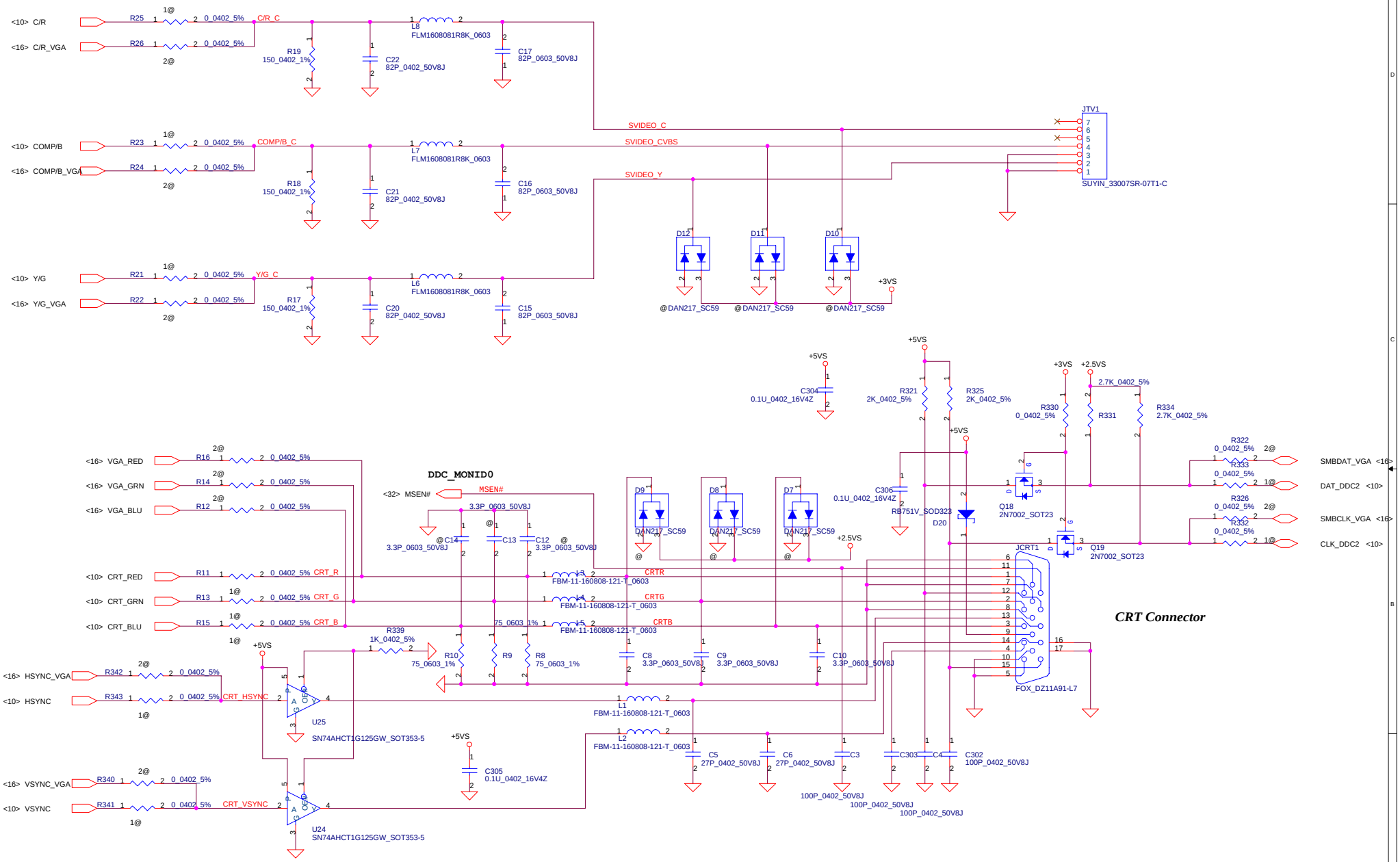

Security Classification	Compal Secret Data		
Issued Date	2005/03/01	Deciphered Date	2006/03/01

THIS SHEET OF ENGINEERING DRAWING IS THE PROPRIETARY PROPERTY OF COMPAL ELECTRONICS, INC. AND CONTAINS CONFIDENTIAL AND TRADE SECRET INFORMATION. THIS SHEET MAY NOT BE TRANSFERED FROM THE CUSTODY OF THE COMPETENT DIVISION OF R&D DEPARTMENT EXCEPT AS AUTHORIZED BY COMPAL ELECTRONICS, INC. NEITHER THIS SHEET NOR THE INFORMATION IT CONTAINS MAY BE USED BY OR DISCLOSED TO ANY THIRD PARTY WITHOUT PRIOR WRITTEN CONSENT OF COMPAL ELECTRONICS, INC.

Title: <Title>

Size: Custom | Document Number: LA-2362 | Rev: 1

Date: Friday, March 11, 2005 | Sheet 17 of 52

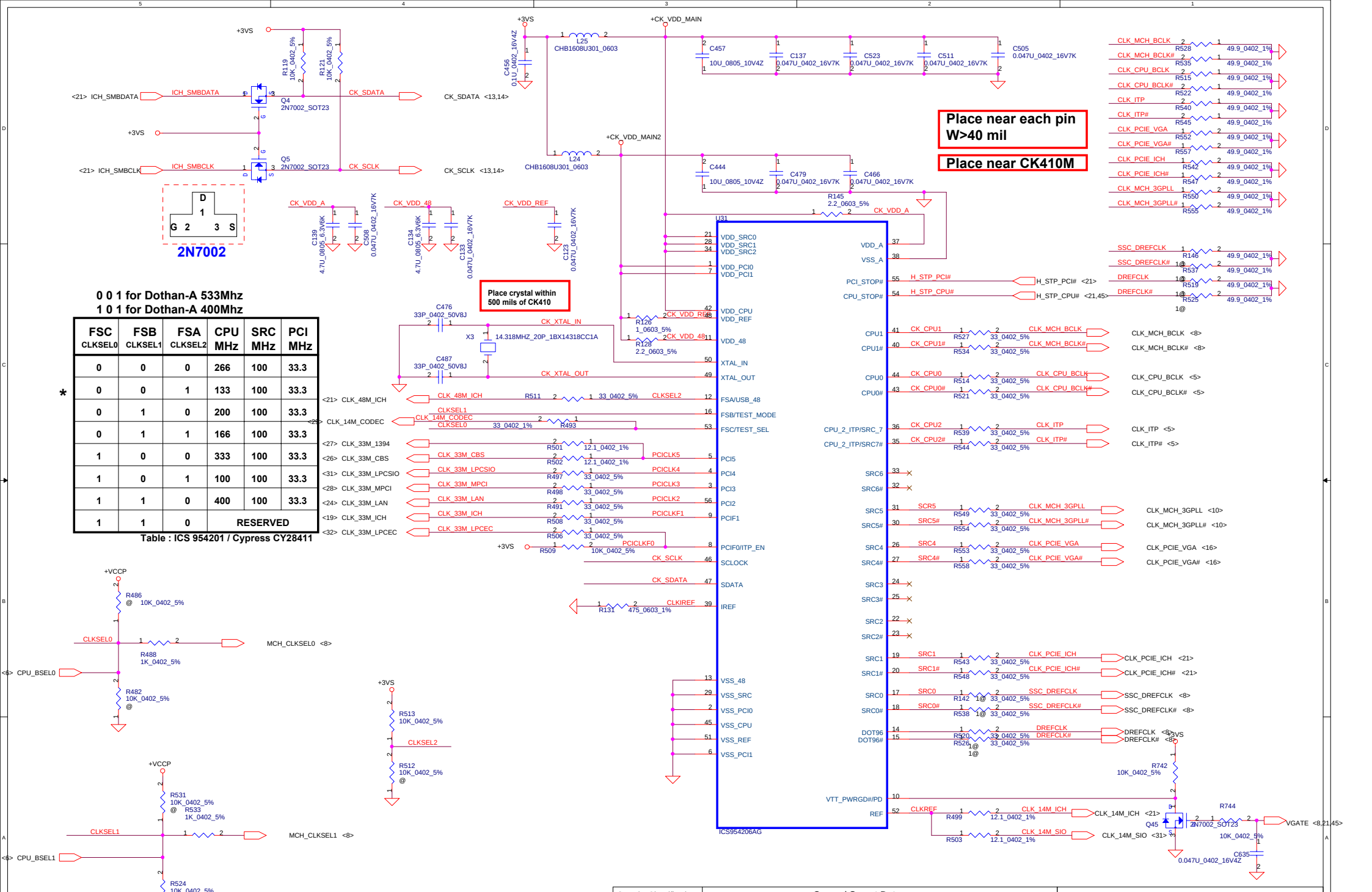

FSC CLKSEL0	FSB CLKSEL1	FSA CLKSEL2	CPU MHz	SRC MHz	PCI MHz
0	0	0	266	100	33.3
* 0	0	1	133	100	33.3
0	1	0	200	100	33.3
0	1	1	166	100	33.3
1	0	0	333	100	33.3
1	0	1	100	100	33.3
1	1	0	400	100	33.3
1	1	0	RESERVED		

Security Classification	Compal Secret Data		
Issued Date	2005/03/01	Deciphered Date	2006/03/01

THIS SHEET OF ENGINEERING DRAWING IS THE PROPRIETARY PROPERTY OF COMPAL ELECTRONICS, INC. AND CONTAINS CONFIDENTIAL AND TRADE SECRET INFORMATION. THIS SHEET MAY NOT BE TRANSFERED FROM THE CUSTODY OF THE COMPETENT DIVISION OF R&D DEPARTMENT EXCEPT AS AUTHORIZED BY COMPAL ELECTRONICS, INC. NEITHER THIS SHEET NOR THE INFORMATION IT CONTAINS MAY BE USED BY OR DISCLOSED TO ANY THIRD PARTY WITHOUT PRIOR WRITTEN CONSENT OF COMPAL ELECTRONICS, INC.

Title: <Title>

Size: Custom | Document Number: LA-2362 | Rev: 1

Date: Friday, March 11, 2005 | Sheet 18 of 52

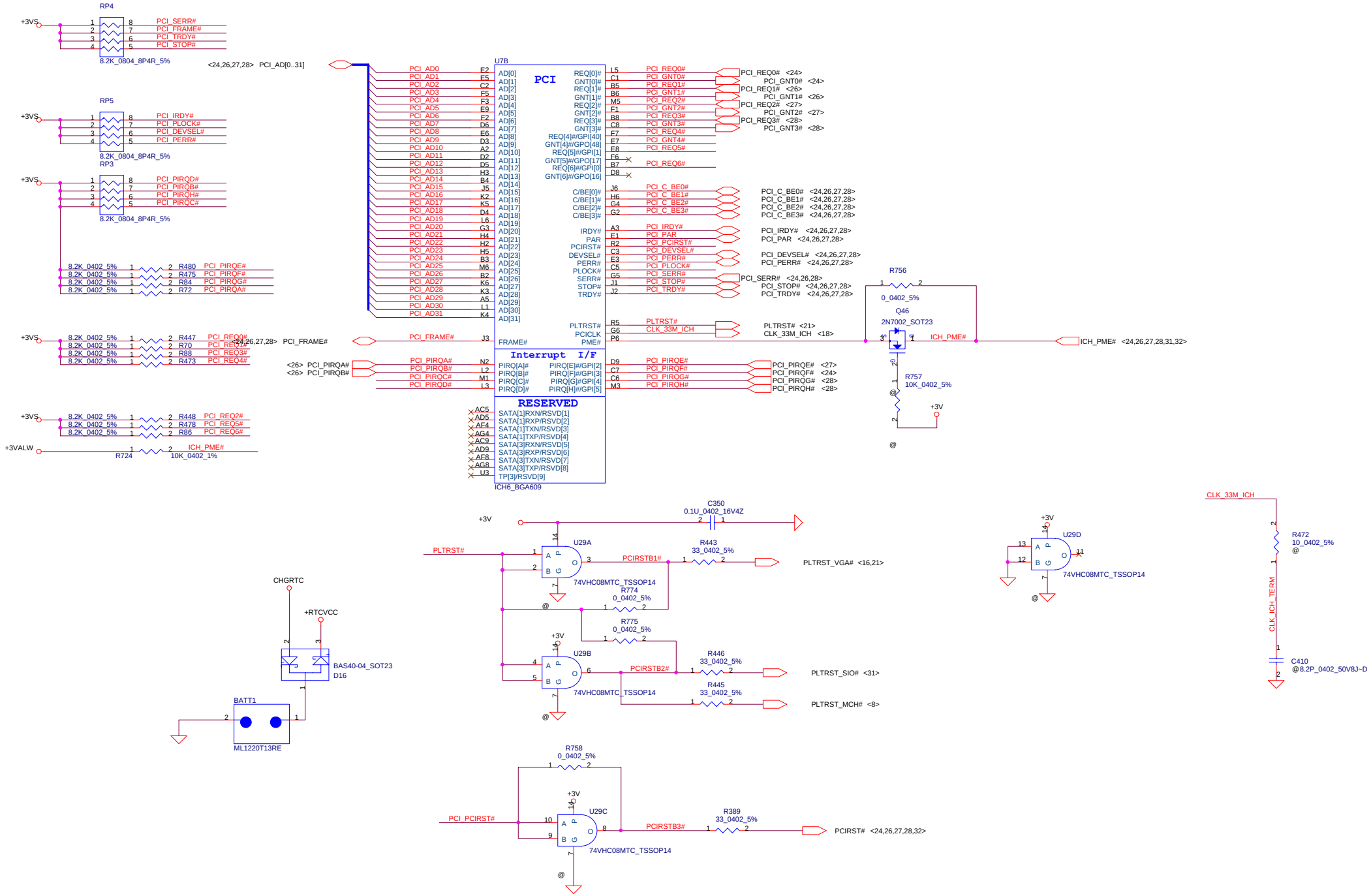

Security Classification	Compal Secret Data		
Issued Date	2005/03/01	Deciphered Date	2006/03/01

THIS SHEET OF ENGINEERING DRAWING IS THE PROPRIETARY PROPERTY OF COMPAL ELECTRONICS, INC. AND CONTAINS CONFIDENTIAL AND TRADE SECRET INFORMATION. THIS SHEET MAY NOT BE TRANSFERED FROM THE CUSTODY OF THE COMPETENT DIVISION OF R&D DEPARTMENT EXCEPT AS AUTHORIZED BY COMPAL ELECTRONICS, INC. NEITHER THIS SHEET NOR THE INFORMATION IT CONTAINS MAY BE USED BY OR DISCLOSED TO ANY THIRD PARTY WITHOUT PRIOR WRITTEN CONSENT OF COMPAL ELECTRONICS, INC.

Title: <Title>

Size: Custom | Document Number: LA-2362 | Rev: 1

Date: Friday, March 11, 2005 | Sheet 19 of 52

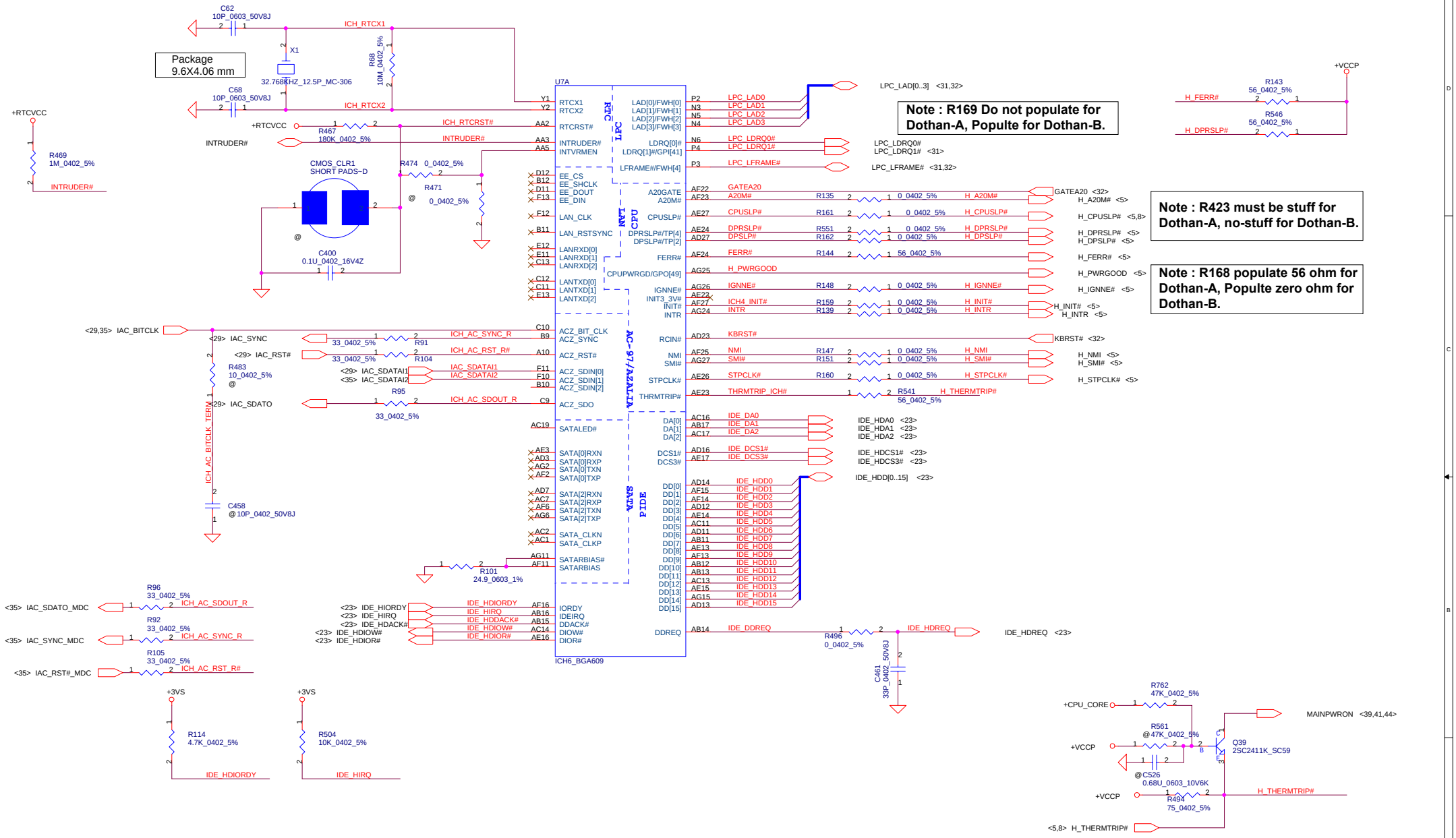

Security Classification	Compal Secret Data		
Issued Date	2005/03/01	Deciphered Date	2006/03/01

THIS SHEET OF ENGINEERING DRAWING IS THE PROPRIETARY PROPERTY OF COMPAL ELECTRONICS, INC. AND CONTAINS CONFIDENTIAL AND TRADE SECRET INFORMATION. THIS SHEET MAY NOT BE TRANSFERED FROM THE CUSTODY OF THE COMPETENT DIVISION OF R&D DEPARTMENT EXCEPT AS AUTHORIZED BY COMPAL ELECTRONICS, INC. NEITHER THIS SHEET NOR THE INFORMATION IT CONTAINS MAY BE USED BY OR DISCLOSED TO ANY THIRD PARTY WITHOUT PRIOR WRITTEN CONSENT OF COMPAL ELECTRONICS, INC.

Title: <Title>

Size: Custom | Document Number: LA-2362 | Rev: 1

Date: Friday, March 11, 2005 | Sheet 20 of 52

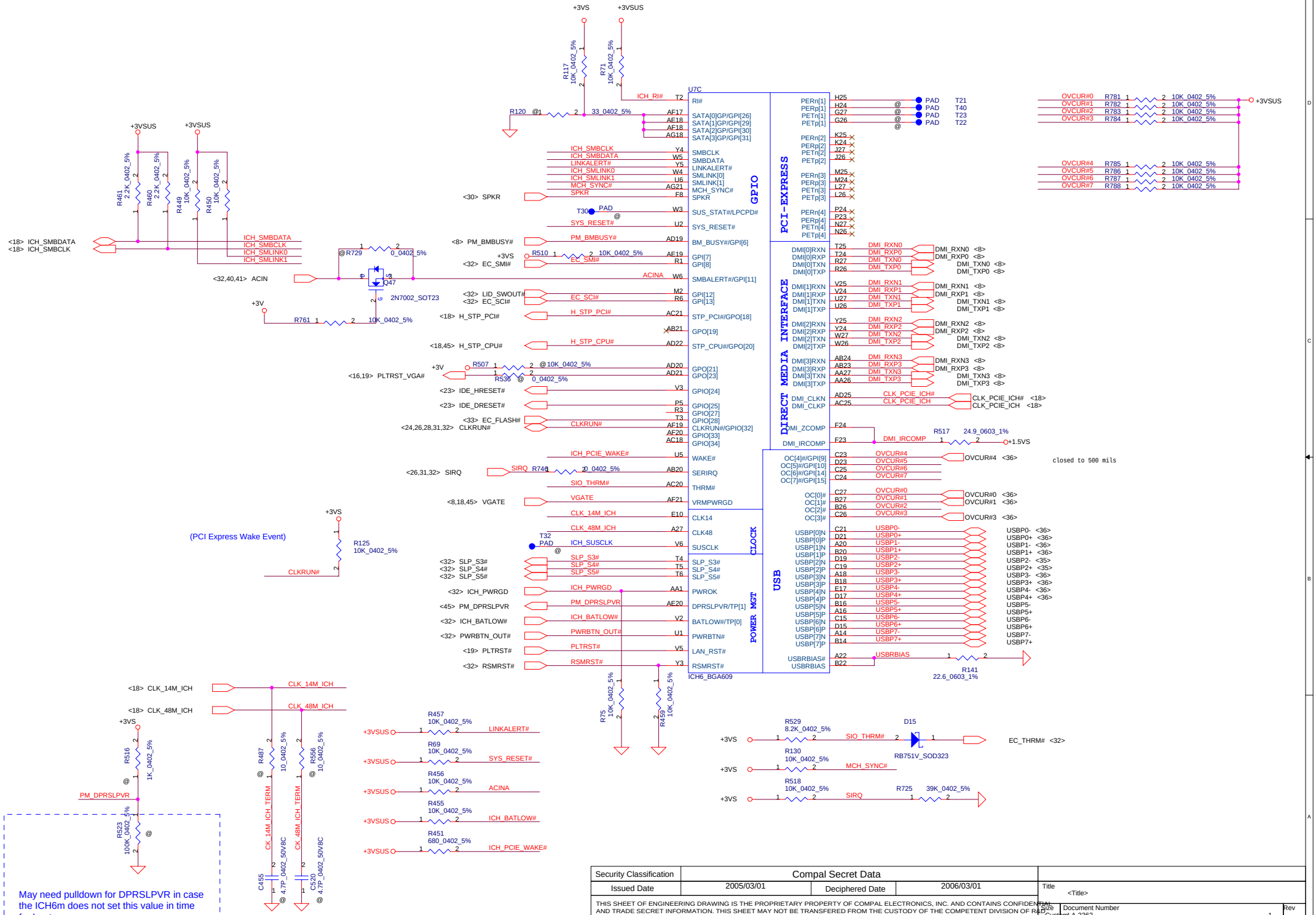

Security Classification	Compal Secret Data		
Issued Date	2005/03/01	Deciphered Date	2006/03/01

THIS SHEET OF ENGINEERING DRAWING IS THE PROPRIETARY PROPERTY OF COMPAL ELECTRONICS, INC. AND CONTAINS CONFIDENTIAL AND TRADE SECRET INFORMATION. THIS SHEET MAY NOT BE TRANSFERRED FROM THE CUSTODY OF THE COMPETENT DIVISION OF R&D DEPARTMENT EXCEPT AS AUTHORIZED BY COMPAL ELECTRONICS, INC. NEITHER THIS SHEET NOR THE INFORMATION IT CONTAINS MAY BE USED BY OR DISCLOSED TO ANY THIRD PARTY WITHOUT PRIOR WRITTEN CONSENT OF COMPAL ELECTRONICS, INC.

Title: <Title>

Size: Custom | Document Number: LA-2362 | Rev: 1

Date: Friday, March 11, 2005 | Sheet 21 of 52

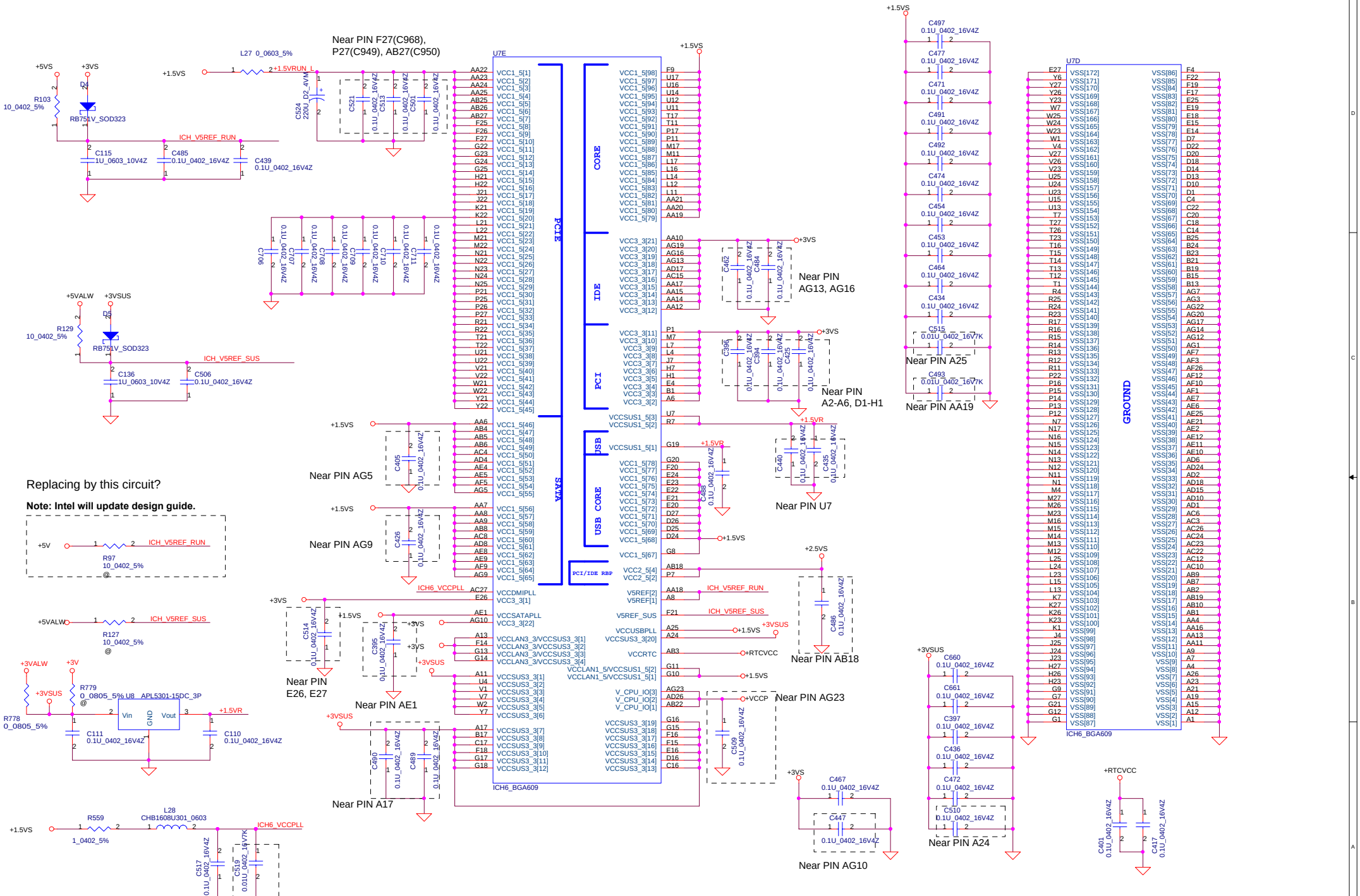

Security Classification	Compal Secret Data		
Issued Date	2005/03/01	Deciphered Date	2006/03/01

THIS SHEET OF ENGINEERING DRAWING IS THE PROPRIETARY PROPERTY OF COMPAL ELECTRONICS, INC. AND CONTAINS CONFIDENTIAL AND TRADE SECRET INFORMATION. THIS SHEET MAY NOT BE TRANSFERED FROM THE CUSTODY OF THE COMPETENT DIVISION OF R&D DEPARTMENT EXCEPT AS AUTHORIZED BY COMPAL ELECTRONICS, INC. NEITHER THIS SHEET NOR THE INFORMATION IT CONTAINS MAY BE USED BY OR DISCLOSED TO ANY THIRD PARTY WITHOUT PRIOR WRITTEN CONSENT OF COMPAL ELECTRONICS, INC.

Title: <Title>

Size: Custom | Document Number: LA-2362 | Rev: 1

Date: Friday, March 11, 2005 | Sheet 22 of 52

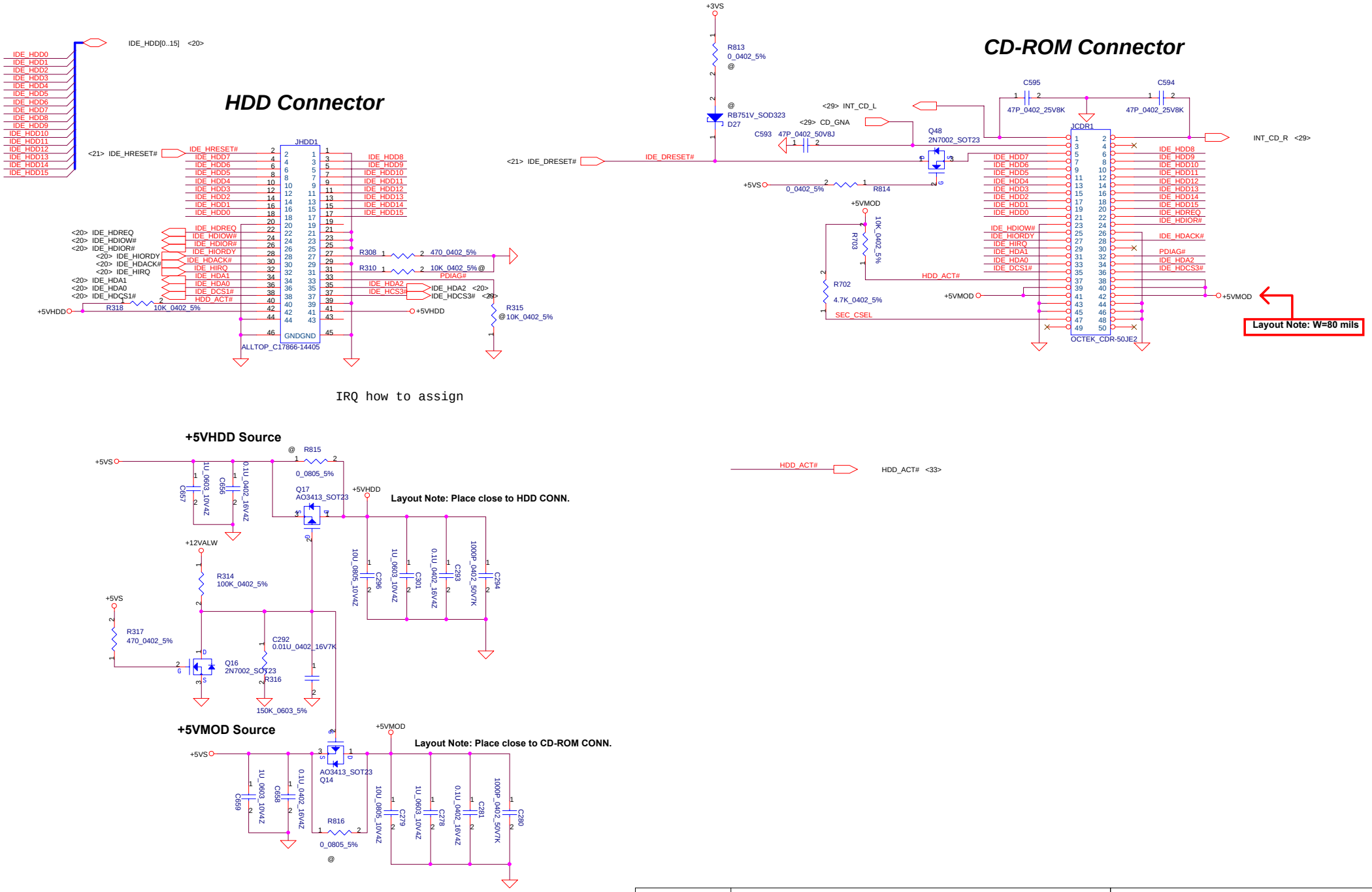

Security Classification	Compal Secret Data		
Issued Date	2005/03/01	Deciphered Date	2006/03/01

Title <Title>

Size Custom | Document Number LA-2362 | Rev 1

Date: Friday, March 11, 2005 | Sheet 23 of 52

THIS SHEET OF ENGINEERING DRAWING IS THE PROPRIETARY PROPERTY OF COMPAL ELECTRONICS, INC. AND CONTAINS CONFIDENTIAL AND TRADE SECRET INFORMATION. THIS SHEET MAY NOT BE TRANSFERED FROM THE CUSTODY OF THE COMPETENT DIVISION OF R&D DEPARTMENT EXCEPT AS AUTHORIZED BY COMPAL ELECTRONICS, INC. NEITHER THIS SHEET NOR THE INFORMATION IT CONTAINS MAY BE USED BY OR DISCLOSED TO ANY THIRD PARTY WITHOUT PRIOR WRITTEN CONSENT OF COMPAL ELECTRONICS, INC.

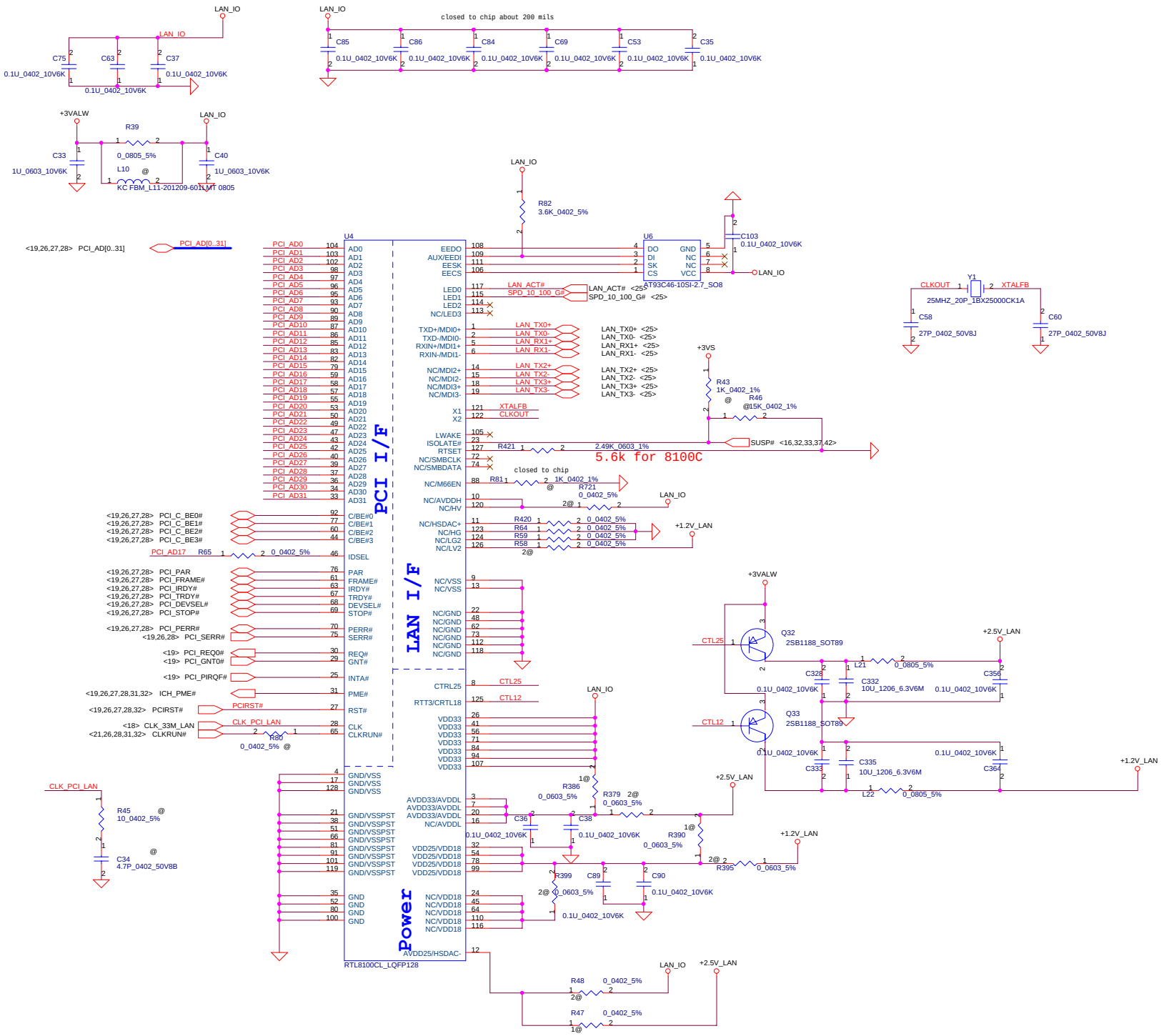

Security Classification	Compal Secret Data		
Issued Date	2005/03/01	Deciphered Date	2006/03/01

Title: <Title>

Size: Custom | Document Number: LA-2362 | Rev: 1

Date: Friday, March 11, 2005 | Sheet 24 of 52

THIS SHEET OF ENGINEERING DRAWING IS THE PROPRIETARY PROPERTY OF COMPAL ELECTRONICS, INC. AND CONTAINS CONFIDENTIAL AND TRADE SECRET INFORMATION. THIS SHEET MAY NOT BE TRANSFERED FROM THE CUSTODY OF THE COMPETENT DIVISION OF R&D DEPARTMENT EXCEPT AS AUTHORIZED BY COMPAL ELECTRONICS, INC. NEITHER THIS SHEET NOR THE INFORMATION IT CONTAINS MAY BE USED BY OR DISCLOSED TO ANY THIRD PARTY WITHOUT PRIOR WRITTEN CONSENT OF COMPAL ELECTRONICS, INC.

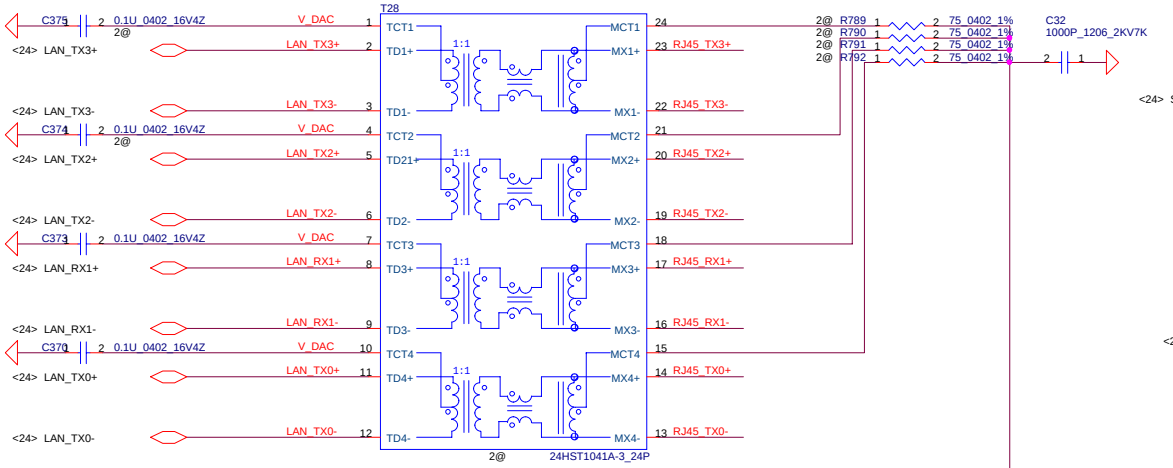

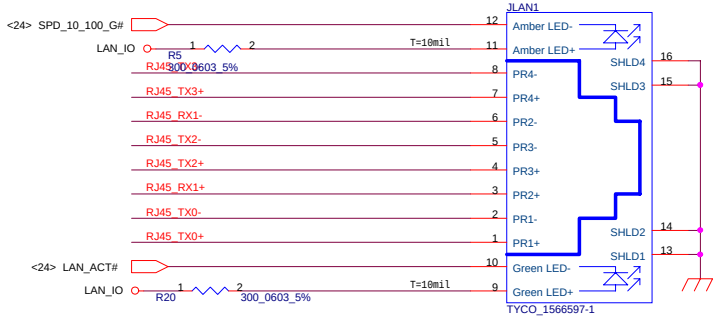

RTL8110SBL used the 24HST1041A-3_24P

RTL8100CL used the 24ST0023-3_24P

Layout Note
24HST1041A-3 pls close to conn.

Termination plane should be copled to chassis ground and also depends on safety concern

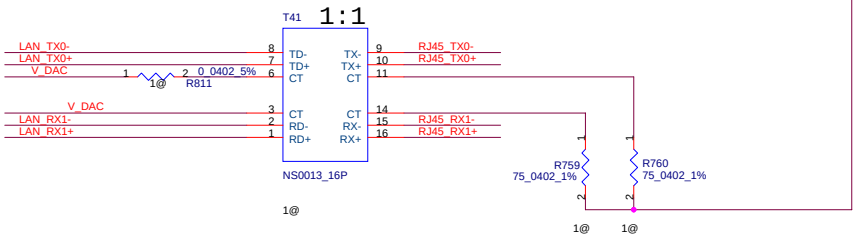

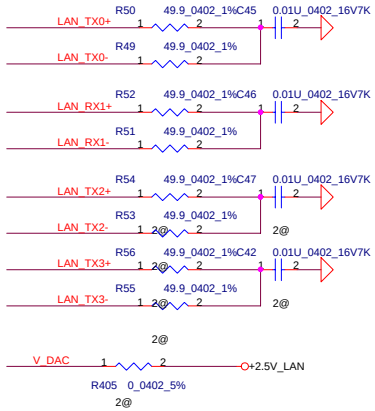

Termination plane should be copled to chassis ground and also depends on safety concern

Please close to LAN IC

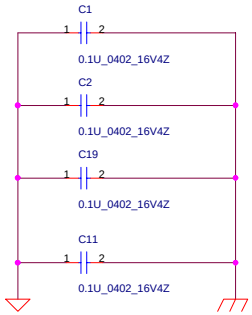

Security Classification	Compal Secret Data		
Issued Date	2005/03/01	Deciphered Date	2006/03/01

THIS SHEET OF ENGINEERING DRAWING IS THE PROPRIETARY PROPERTY OF COMPAL ELECTRONICS, INC. AND CONTAINS CONFIDENTIAL AND TRADE SECRET INFORMATION. THIS SHEET MAY NOT BE TRANSFERED FROM THE CUSTODY OF THE COMPETENT DIVISION OF R&D DEPARTMENT EXCEPT AS AUTHORIZED BY COMPAL ELECTRONICS, INC. NEITHER THIS SHEET NOR THE INFORMATION IT CONTAINS MAY BE USED BY OR DISCLOSED TO ANY THIRD PARTY WITHOUT PRIOR WRITTEN CONSENT OF COMPAL ELECTRONICS, INC.

Title: <Title>
Size: Custom | Document Number: LA-2362 | Rev: 1
Date: Friday, March 11, 2005 | Sheet 25 of 52

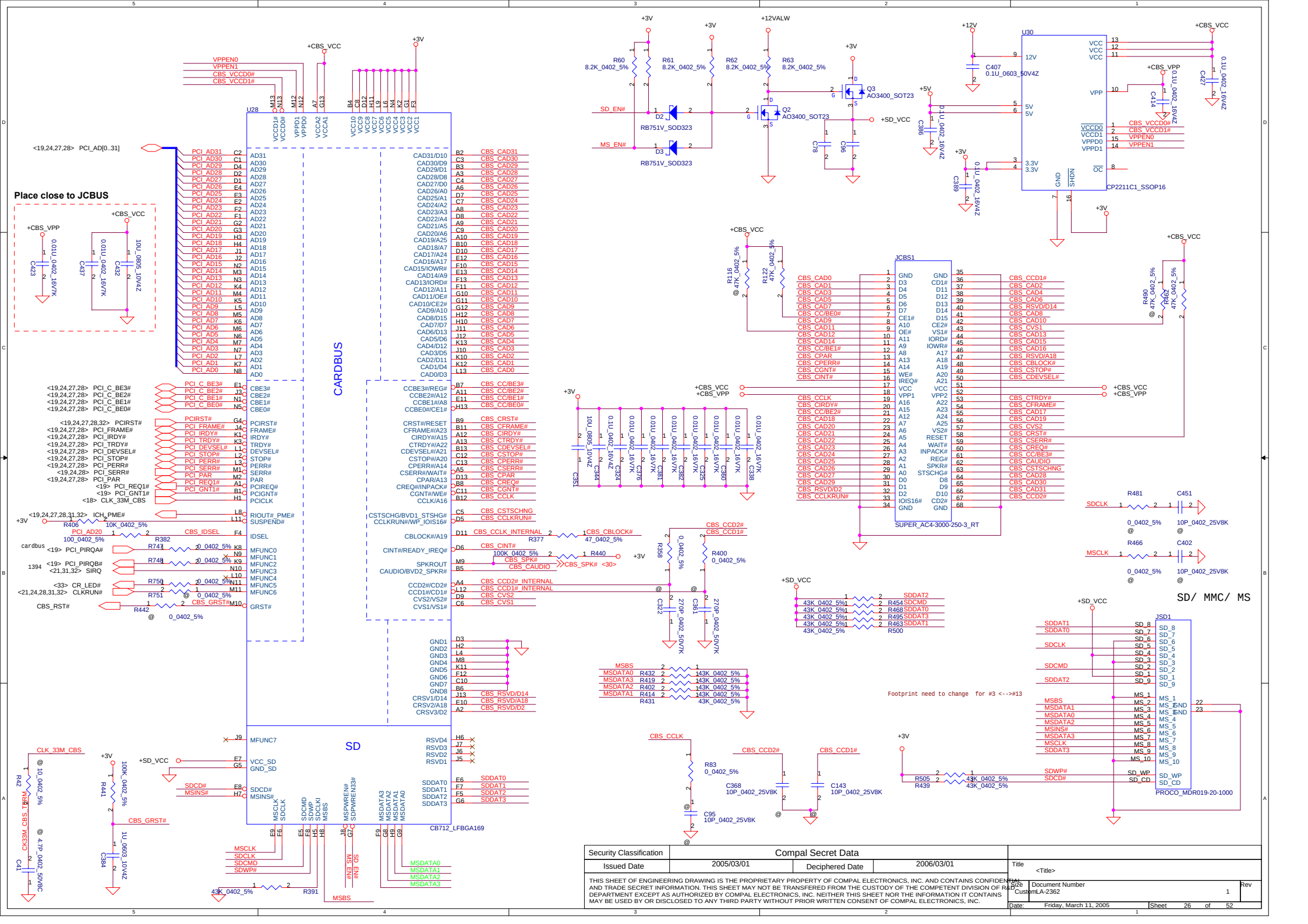
CARDBUS
U28
SD
CB712_LFBGA169
Place close to JCBUS
U30
CP2211C1_SSOP16
JCBS1
SUPER_AC4-3000-250-3_RT
JSD1
PROCO_MDR019-20-1000
SD/ MMC/ MS
Footprint need to change for #3 <-->#13
Security Classification
Compal Secret Data
Issued Date
2005/03/01
Deciphered Date
2006/03/01
Title
<Title>
Size
Document Number
Rev
Custom
LA-2362
1
Date:
Friday, March 11, 2005
Sheet
26
of
52

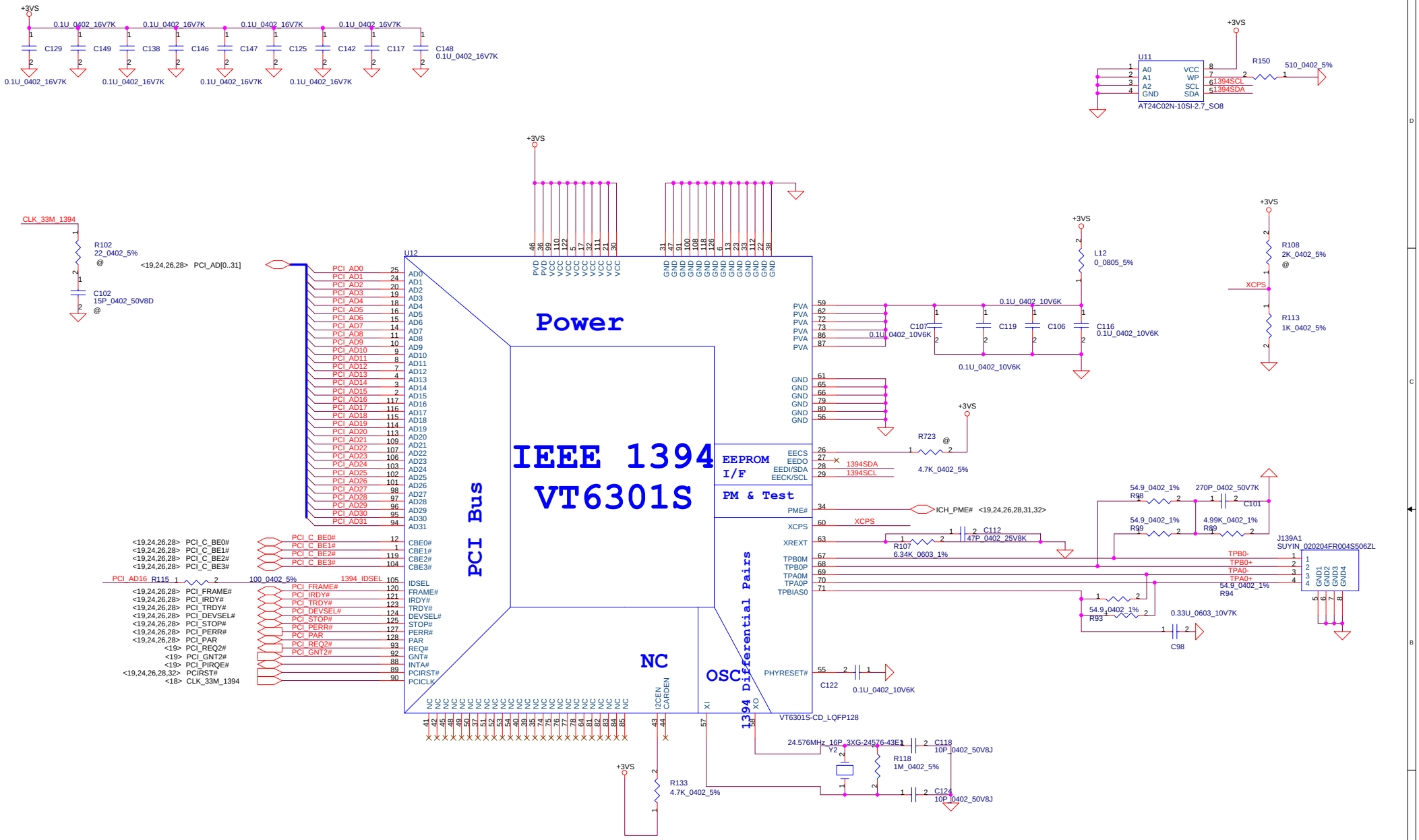

Security Classification	Compal Secret Data		
Issued Date	2005/03/01	Deciphered Date	2006/03/01

Title: <Title>

Size: Custom | Document Number: LA-2362 | Rev: 1

Date: Friday, March 11, 2005 | Sheet 27 of 52

THIS SHEET OF ENGINEERING DRAWING IS THE PROPRIETARY PROPERTY OF COMPAL ELECTRONICS, INC. AND CONTAINS CONFIDENTIAL AND TRADE SECRET INFORMATION. THIS SHEET MAY NOT BE TRANSFERED FROM THE CUSTODY OF THE COMPETENT DIVISION OF R&D DEPARTMENT EXCEPT AS AUTHORIZED BY COMPAL ELECTRONICS, INC. NEITHER THIS SHEET NOR THE INFORMATION IT CONTAINS MAY BE USED BY OR DISCLOSED TO ANY THIRD PARTY WITHOUT PRIOR WRITTEN CONSENT OF COMPAL ELECTRONICS, INC.

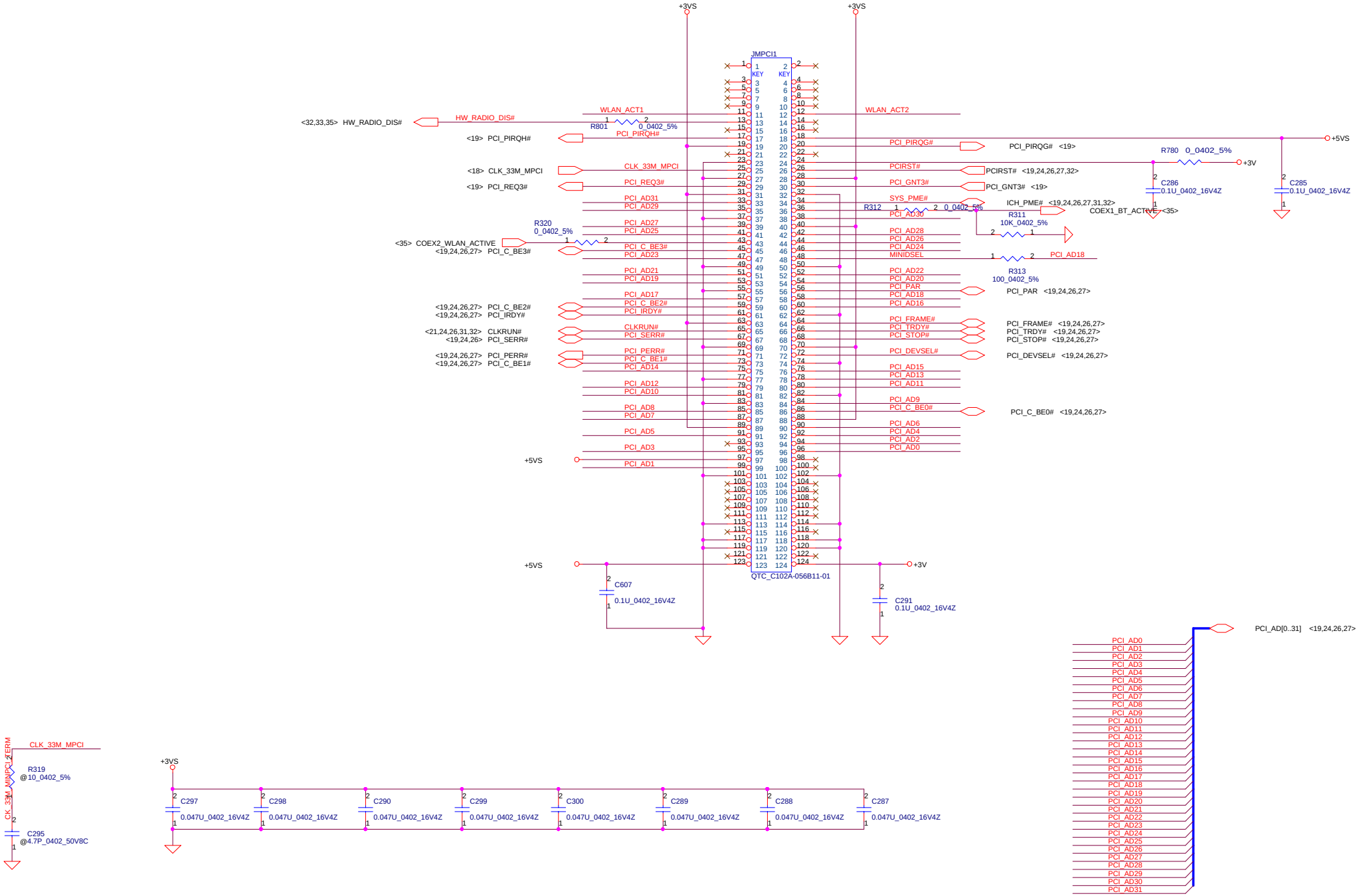

Security Classification	Compal Secret Data		
Issued Date	2005/03/01	Deciphered Date	2006/03/01

THIS SHEET OF ENGINEERING DRAWING IS THE PROPRIETARY PROPERTY OF COMPAL ELECTRONICS, INC. AND CONTAINS CONFIDENTIAL AND TRADE SECRET INFORMATION. THIS SHEET MAY NOT BE TRANSFERED FROM THE CUSTODY OF THE COMPETENT DIVISION OF R&D DEPARTMENT EXCEPT AS AUTHORIZED BY COMPAL ELECTRONICS, INC. NEITHER THIS SHEET NOR THE INFORMATION IT CONTAINS MAY BE USED BY OR DISCLOSED TO ANY THIRD PARTY WITHOUT PRIOR WRITTEN CONSENT OF COMPAL ELECTRONICS, INC.

Title: <Title>

Size: Custom | Document Number: LA-2362 | Rev: 1

Date: Friday, March 11, 2005 | Sheet 28 of 52

AC97 Codec

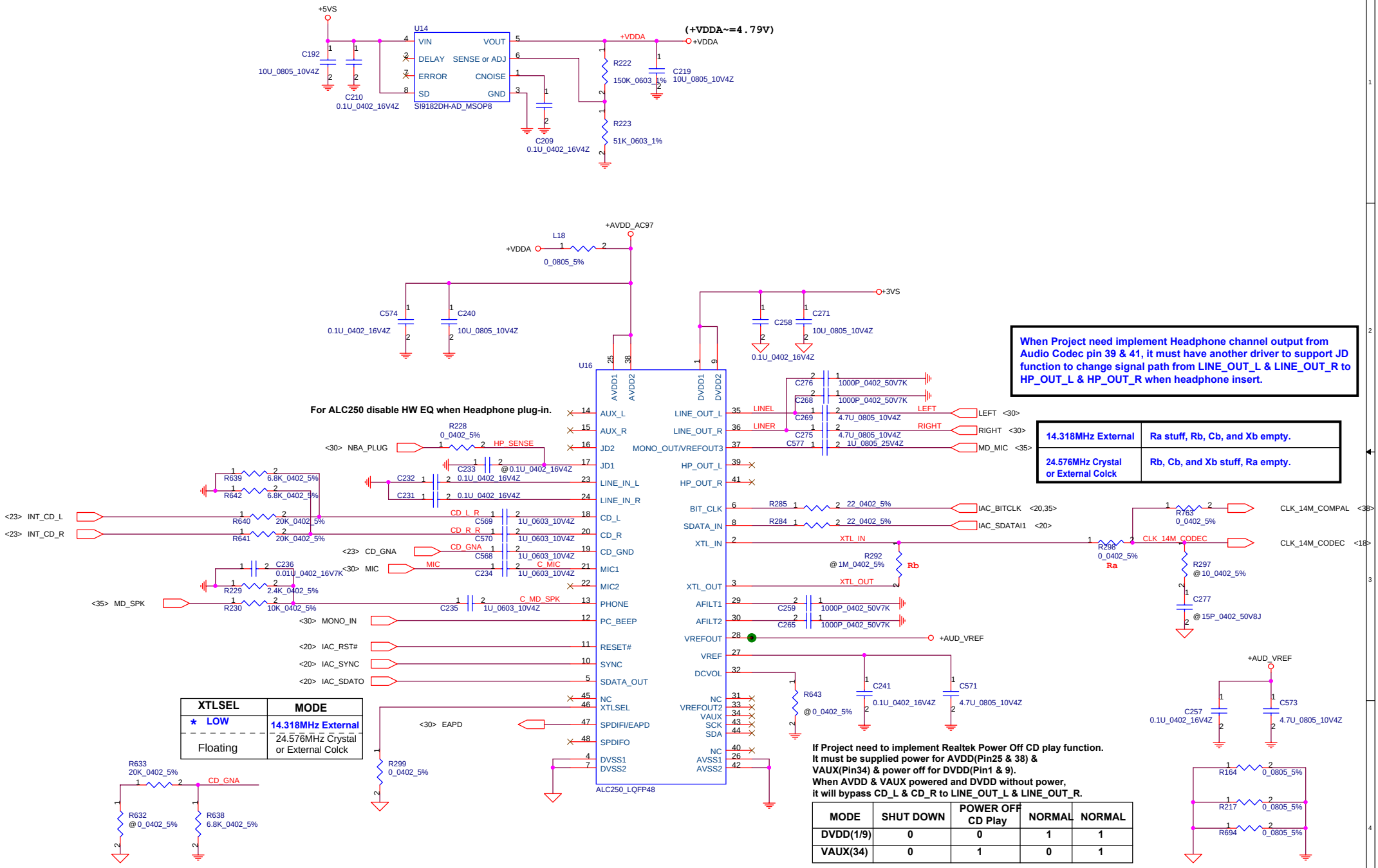

When Project need implement Headphone channel output from Audio Codec pin 39 & 41, it must have another driver to support JD function to change signal path from LINE_OUT_L & LINE_OUT_R to HP_OUT_L & HP_OUT_R when headphone insert.

14.318MHz External	Ra stuff, Rb, Cb, and Xb empty.
24.576MHz Crystal or External Colck	Rb, Cb, and Xb stuff, Ra empty.

XTLSEL	MODE
★ LOW	14.318MHz External
Floating	24.576MHz Crystal or External Colck

If Project need to implement Realtek Power Off CD play function.
It must be supplied power for AVDD(Pin25 & 38) &
VAUX(Pin34) & power off for DVDD(Pin1 & 9).
When AVDD & VAUX powered and DVDD without power,
it will bypass CD_L & CD_R to LINE_OUT_L & LINE_OUT_R.

MODE	SHUT DOWN	POWER OFF CD Play	NORMAL	NORMAL
DVDD(1/9)	0	0	1	1
VAUX(34)	0	1	0	1

Security Classification	Compal Secret Data		
Issued Date	2005/03/01	Deciphered Date	2006/03/01

THIS SHEET OF ENGINEERING DRAWING IS THE PROPRIETARY PROPERTY OF COMPAL ELECTRONICS, INC. AND CONTAINS CONFIDENTIAL AND TRADE SECRET INFORMATION. THIS SHEET MAY NOT BE TRANSFERED FROM THE CUSTODY OF THE COMPETENT DIVISION OF R&D DEPARTMENT EXCEPT AS AUTHORIZED BY COMPAL ELECTRONICS, INC. NEITHER THIS SHEET NOR THE INFORMATION IT CONTAINS MAY BE USED BY OR DISCLOSED TO ANY THIRD PARTY WITHOUT PRIOR WRITTEN CONSENT OF COMPAL ELECTRONICS, INC.

Title: <Title>
Size: Custom | Document Number: LA-2362 | Rev: 1
Date: Friday, March 11, 2005 | Sheet 29 of 52

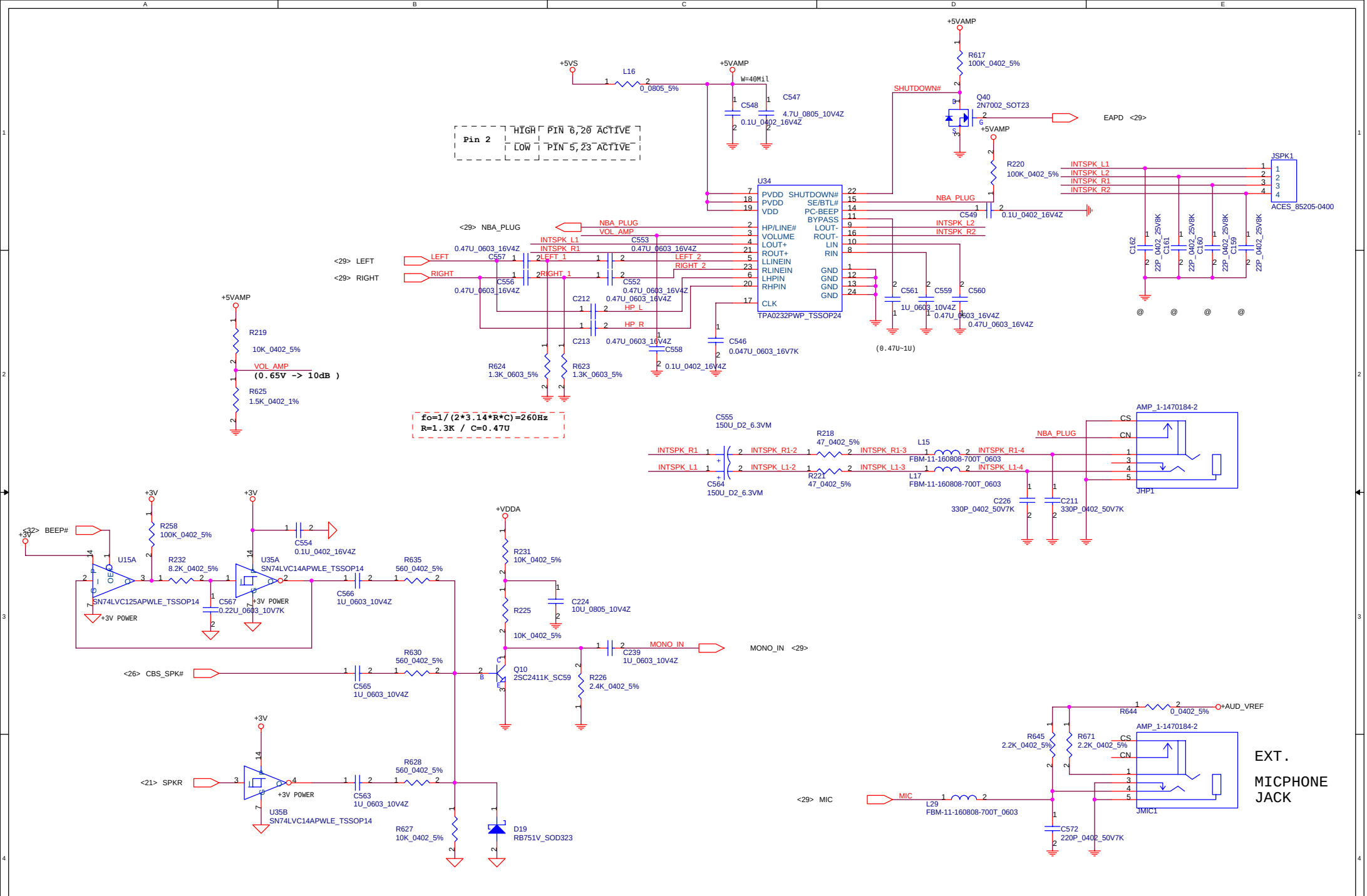

Security Classification	Compal Secret Data		
Issued Date	2005/03/01	Deciphered Date	2006/03/01

THIS SHEET OF ENGINEERING DRAWING IS THE PROPRIETARY PROPERTY OF COMPAL ELECTRONICS, INC. AND CONTAINS CONFIDENTIAL AND TRADE SECRET INFORMATION. THIS SHEET MAY NOT BE TRANSFERED FROM THE CUSTODY OF THE COMPETENT DIVISION OF R&D DEPARTMENT EXCEPT AS AUTHORIZED BY COMPAL ELECTRONICS, INC. NEITHER THIS SHEET NOR THE INFORMATION IT CONTAINS MAY BE USED BY OR DISCLOSED TO ANY THIRD PARTY WITHOUT PRIOR WRITTEN CONSENT OF COMPAL ELECTRONICS, INC.

Title: <Title>

Size: Custom | Document Number: LA-2362 | Rev: 1

Date: Friday, March 11, 2005 | Sheet 30 of 52

FIR Module

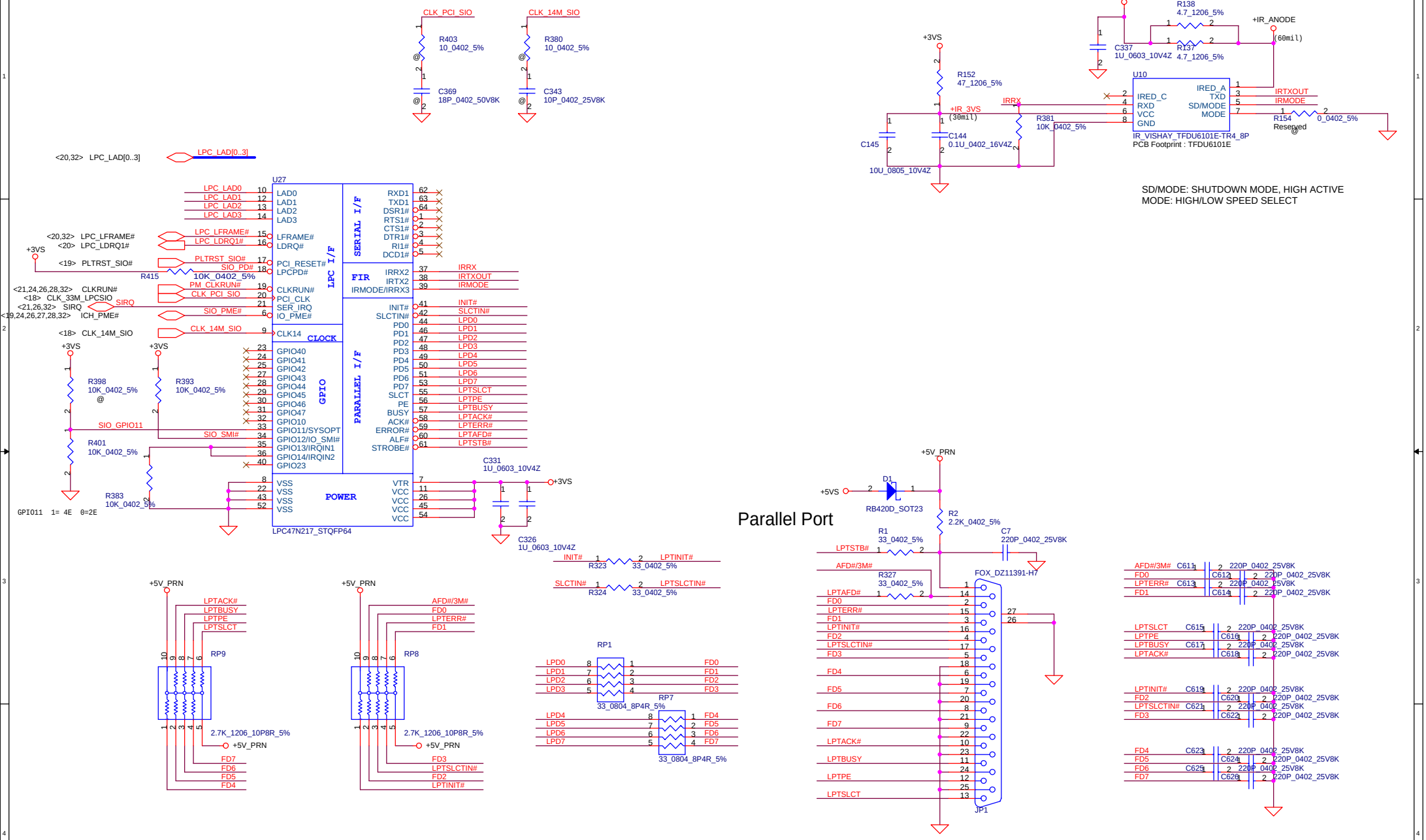

Security Classification	Compal Secret Data		
Issued Date	2005/03/01	Deciphered Date	2006/03/01

THIS SHEET OF ENGINEERING DRAWING IS THE PROPRIETARY PROPERTY OF COMPAL ELECTRONICS, INC. AND CONTAINS CONFIDENTIAL AND TRADE SECRET INFORMATION. THIS SHEET MAY NOT BE TRANSFERED FROM THE CUSTODY OF THE COMPETENT DIVISION OF R&D DEPARTMENT EXCEPT AS AUTHORIZED BY COMPAL ELECTRONICS, INC. NEITHER THIS SHEET NOR THE INFORMATION IT CONTAINS MAY BE USED BY OR DISCLOSED TO ANY THIRD PARTY WITHOUT PRIOR WRITTEN CONSENT OF COMPAL ELECTRONICS, INC.

Title: <Title>

Size: Custom | Document Number: LA-2362 | Rev: 1

Date: Friday, March 11, 2005 | Sheet 31 of 52

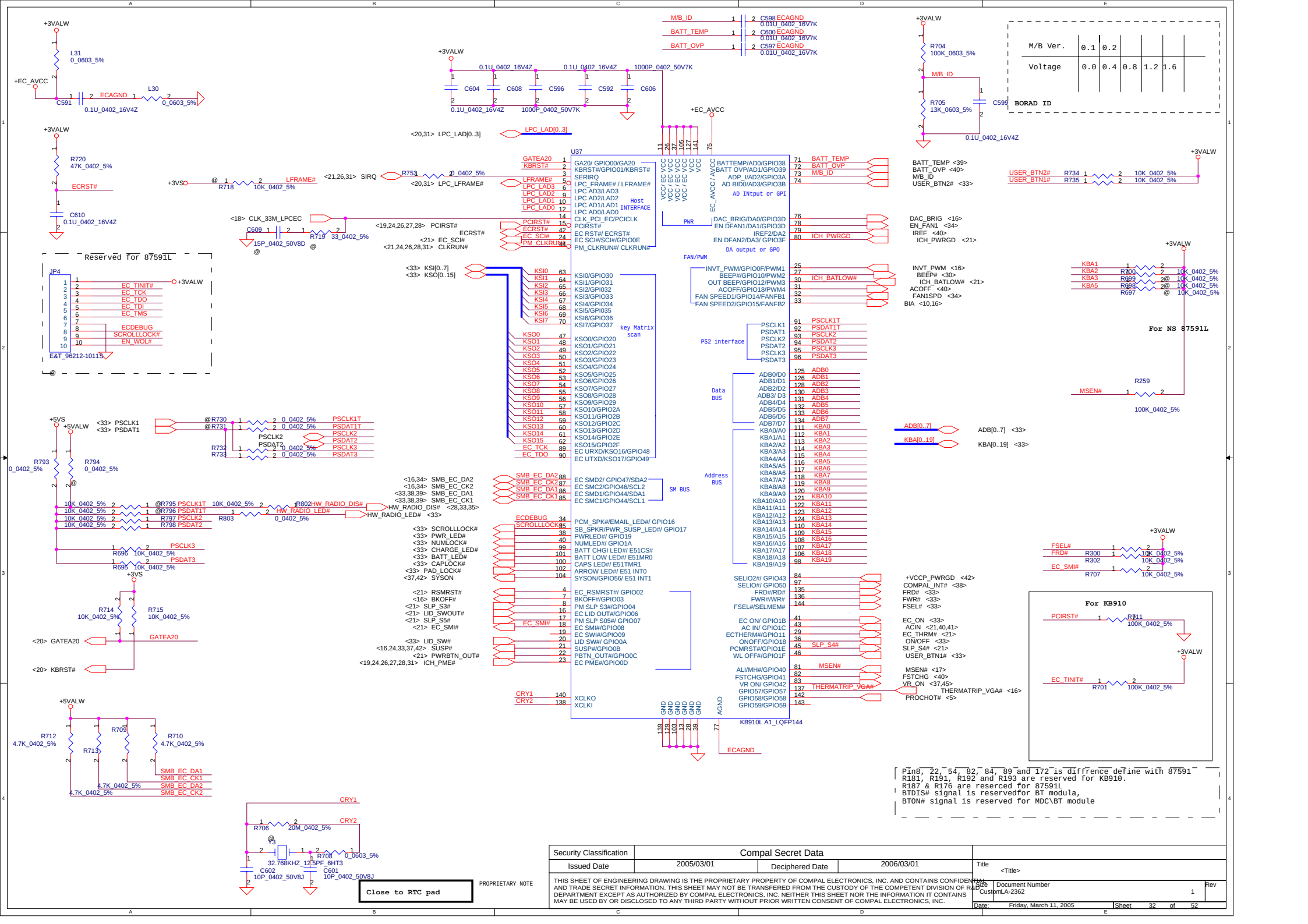
U37
KB910L A1_LQFP144
Reserved for 87591L
JP4
E&T_96212-10115
For NS 87591L
For KB910
BORAD ID
M/B Ver. 0.1 0.2
Voltage 0.0 0.4 0.8 1.2 1.6
Pin8, 22, 54, 82, 84, 89 and 172 is difference define with 87591
R181, R191, R192 and R193 are reserved for KB910.
R187 & R176 are reserved for 87591L
BTDIS# signal is reservedfor BT modula,
BTON# signal is reserved for MDC\BT module
Close to RTC pad
PROPRIETARY NOTE
Security Classification
Compal Secret Data
Issued Date
2005/03/01
Deciphered Date
2006/03/01
Title
<Title>
Size
Custom
Document Number
LA-2362
Rev
1
Date:
Friday, March 11, 2005
Sheet
32
of
52

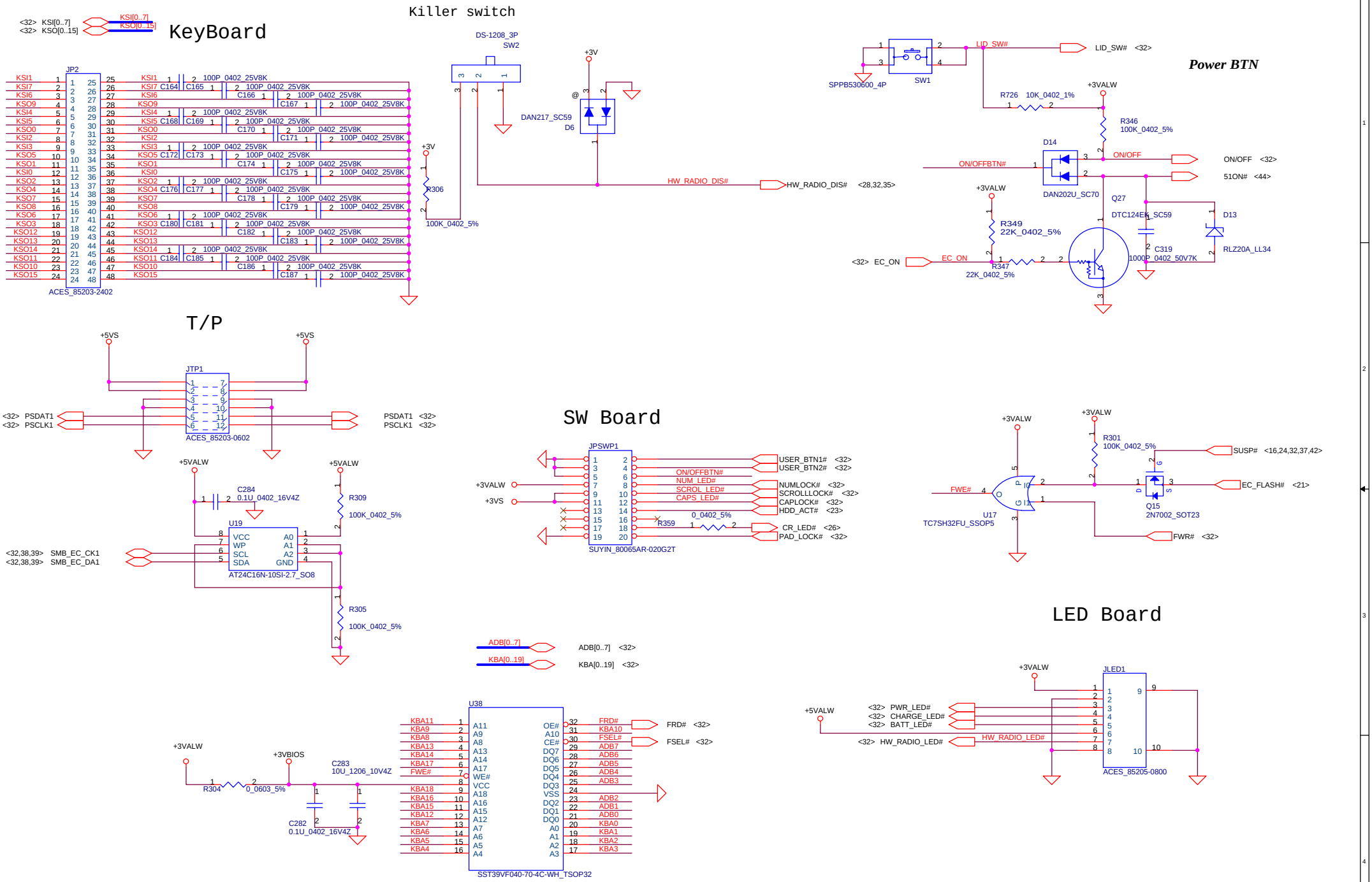

Security Classification	Compal Secret Data		
Issued Date	2005/03/01	Deciphered Date	2006/03/01

THIS SHEET OF ENGINEERING DRAWING IS THE PROPRIETARY PROPERTY OF COMPAL ELECTRONICS, INC. AND CONTAINS CONFIDENTIAL AND TRADE SECRET INFORMATION. THIS SHEET MAY NOT BE TRANSFERED FROM THE CUSTODY OF THE COMPETENT DIVISION OF R&D DEPARTMENT EXCEPT AS AUTHORIZED BY COMPAL ELECTRONICS, INC. NEITHER THIS SHEET NOR THE INFORMATION IT CONTAINS MAY BE USED BY OR DISCLOSED TO ANY THIRD PARTY WITHOUT PRIOR WRITTEN CONSENT OF COMPAL ELECTRONICS, INC.

Title: <Title>

Size: Custom | Document Number: LA-2362 | Rev: 1

Date: Friday, March 11, 2005 | Sheet 33 of 52

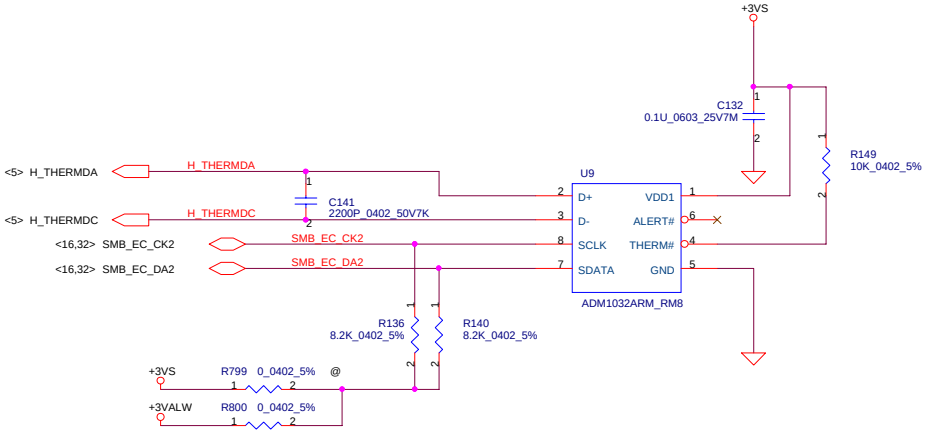

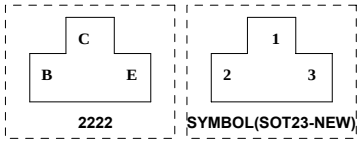

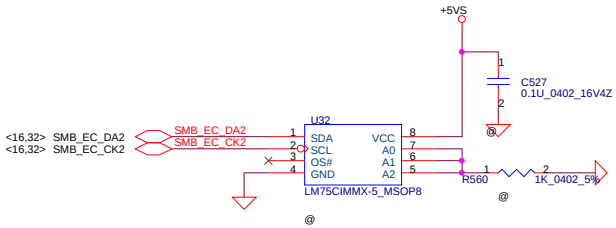

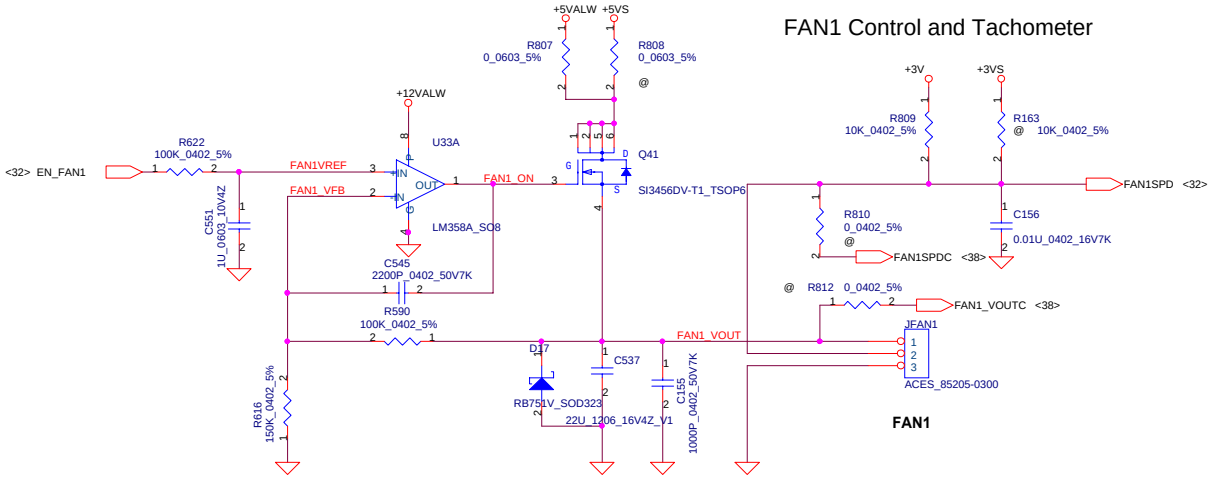

Security Classification	Compal Secret Data			
Issued Date	2005/03/01	Deciphered Date	2006/03/01	Title <Title>

THIS SHEET OF ENGINEERING DRAWING IS THE PROPRIETARY PROPERTY OF COMPAL ELECTRONICS, INC. AND CONTAINS CONFIDENTIAL AND TRADE SECRET INFORMATION. THIS SHEET MAY NOT BE TRANSFERED FROM THE CUSTODY OF THE COMPETENT DIVISION OF R&D DEPARTMENT EXCEPT AS AUTHORIZED BY COMPAL ELECTRONICS, INC. NEITHER THIS SHEET NOR THE INFORMATION IT CONTAINS MAY BE USED BY OR DISCLOSED TO ANY THIRD PARTY WITHOUT PRIOR WRITTEN CONSENT OF COMPAL ELECTRONICS, INC.

Size	Document Number	Rev
Custom	LA-2362	1

Date: Friday, March 11, 2005 Sheet 34 of 52

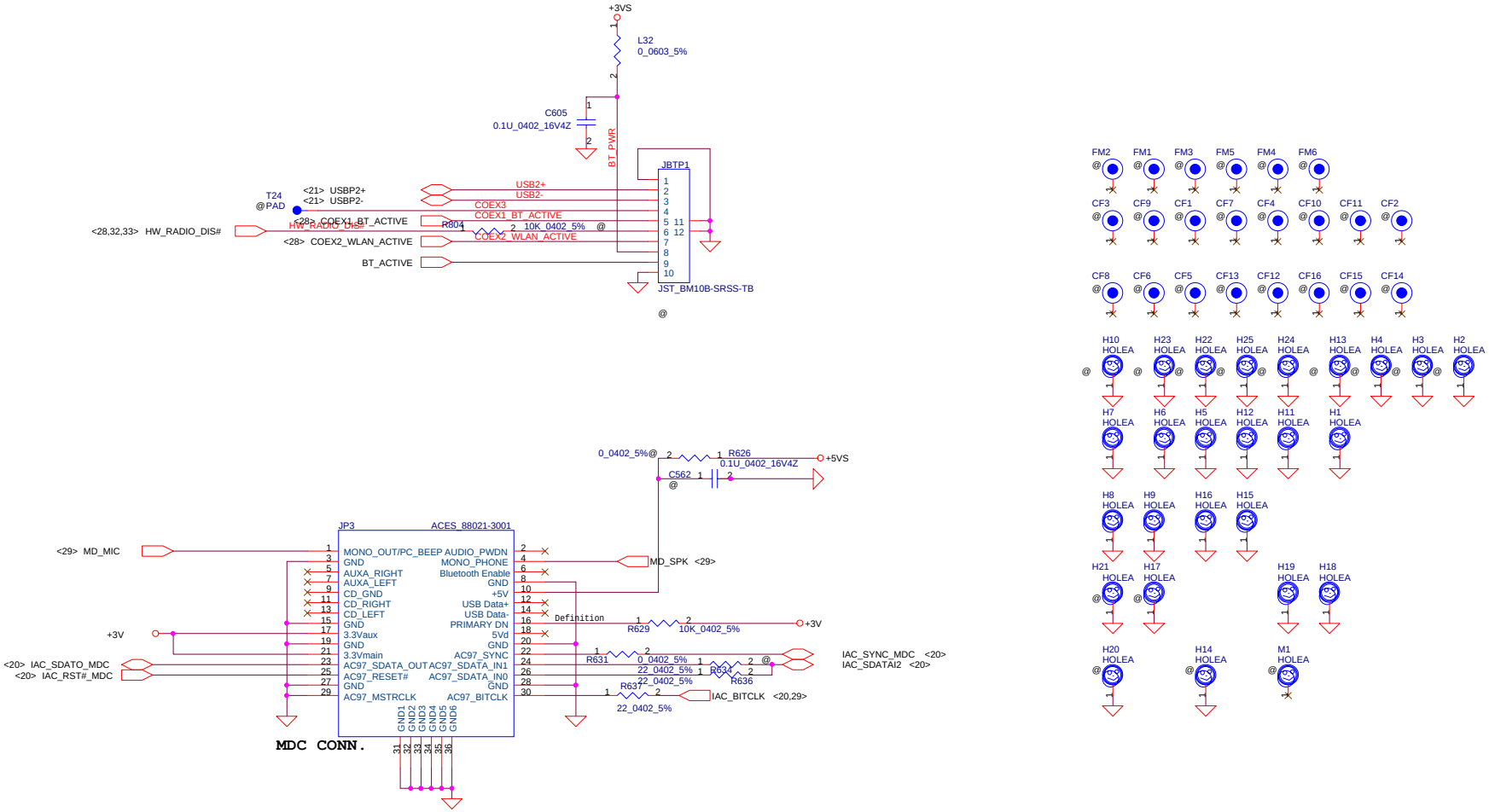

Security Classification	Compal Secret Data		
Issued Date	2005/03/01	Deciphered Date	2006/03/01

THIS SHEET OF ENGINEERING DRAWING IS THE PROPRIETARY PROPERTY OF COMPAL ELECTRONICS, INC. AND CONTAINS CONFIDENTIAL AND TRADE SECRET INFORMATION. THIS SHEET MAY NOT BE TRANSFERED FROM THE CUSTODY OF THE COMPETENT DIVISION OF R&D DEPARTMENT EXCEPT AS AUTHORIZED BY COMPAL ELECTRONICS, INC. NEITHER THIS SHEET NOR THE INFORMATION IT CONTAINS MAY BE USED BY OR DISCLOSED TO ANY THIRD PARTY WITHOUT PRIOR WRITTEN CONSENT OF COMPAL ELECTRONICS, INC.

Title: <Title>

Size: Custom | Document Number: LA-2362 | Rev: 1

Date: Friday, March 11, 2005 | Sheet 35 of 52

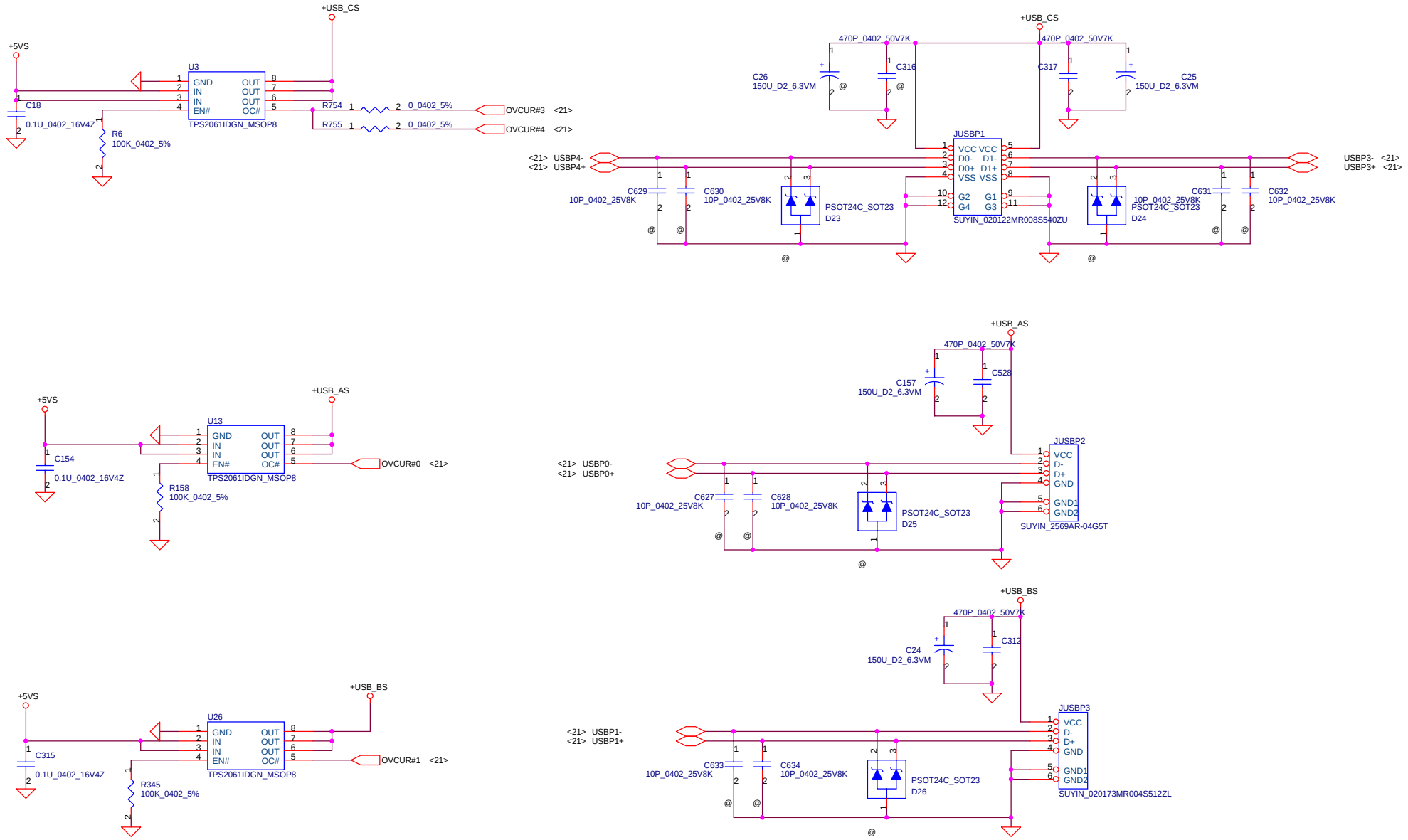

Security Classification	Compal Secret Data		
Issued Date	2005/03/01	Deciphered Date	2006/03/01

THIS SHEET OF ENGINEERING DRAWING IS THE PROPRIETARY PROPERTY OF COMPAL ELECTRONICS, INC. AND CONTAINS CONFIDENTIAL AND TRADE SECRET INFORMATION. THIS SHEET MAY NOT BE TRANSFERED FROM THE CUSTODY OF THE COMPETENT DIVISION OF R&D DEPARTMENT EXCEPT AS AUTHORIZED BY COMPAL ELECTRONICS, INC. NEITHER THIS SHEET NOR THE INFORMATION IT CONTAINS MAY BE USED BY OR DISCLOSED TO ANY THIRD PARTY WITHOUT PRIOR WRITTEN CONSENT OF COMPAL ELECTRONICS, INC.

Title: <Title>

Size: Custom | Document Number: LA-2362 | Rev: 1

Date: Friday, March 11, 2005 | Sheet 36 of 52

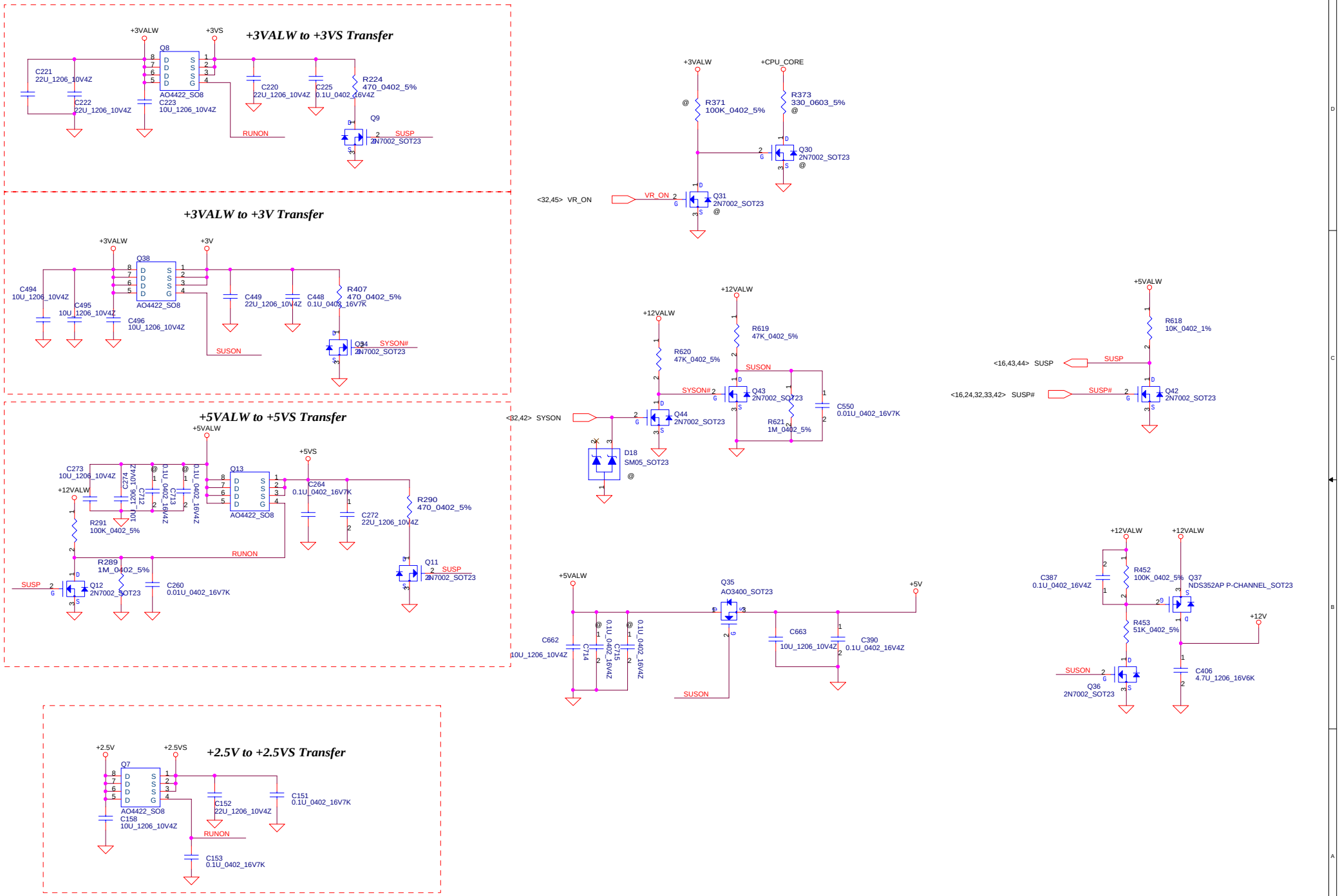

Security Classification	Compal Secret Data		
Issued Date	2005/03/01	Deciphered Date	2006/03/01

THIS SHEET OF ENGINEERING DRAWING IS THE PROPRIETARY PROPERTY OF COMPAL ELECTRONICS, INC. AND CONTAINS CONFIDENTIAL AND TRADE SECRET INFORMATION. THIS SHEET MAY NOT BE TRANSFERED FROM THE CUSTODY OF THE COMPETENT DIVISION OF R&D DEPARTMENT EXCEPT AS AUTHORIZED BY COMPAL ELECTRONICS, INC. NEITHER THIS SHEET NOR THE INFORMATION IT CONTAINS MAY BE USED BY OR DISCLOSED TO ANY THIRD PARTY WITHOUT PRIOR WRITTEN CONSENT OF COMPAL ELECTRONICS, INC.

Title: <Title>

Size: Custom | Document Number: LA-2362 | Rev: 1

Date: Friday, March 11, 2005 | Sheet 37 of 52

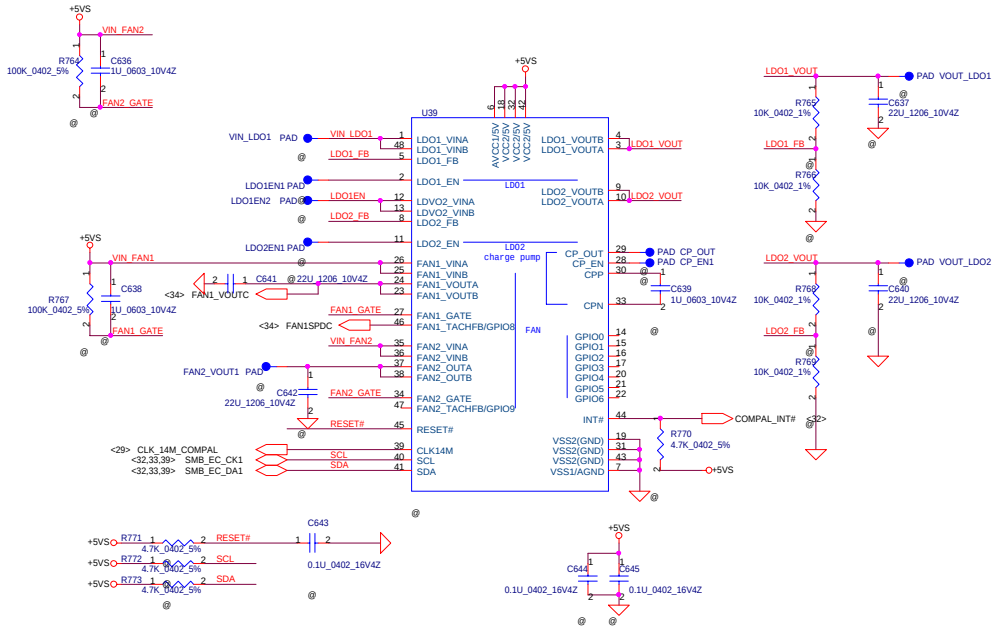

Security Classification	Compal Secret Data		
Issued Date	2005/03/01	Deciphered Date	2006/03/01

THIS SHEET OF ENGINEERING DRAWING IS THE PROPRIETARY PROPERTY OF COMPAL ELECTRONICS, INC. AND CONTAINS CONFIDENTIAL AND TRADE SECRET INFORMATION. THIS SHEET MAY NOT BE TRANSFERED FROM THE CUSTODY OF THE COMPETENT DIVISION OF R&D DEPARTMENT EXCEPT AS AUTHORIZED BY COMPAL ELECTRONICS, INC. NEITHER THIS SHEET NOR THE INFORMATION IT CONTAINS MAY BE USED BY OR DISCLOSED TO ANY THIRD PARTY WITHOUT PRIOR WRITTEN CONSENT OF COMPAL ELECTRONICS, INC.

Title: <Title>

Size: C | Document Number: LA-2362 | Rev: 1

Date: Friday, March 11, 2005 | Sheet 38 of 52

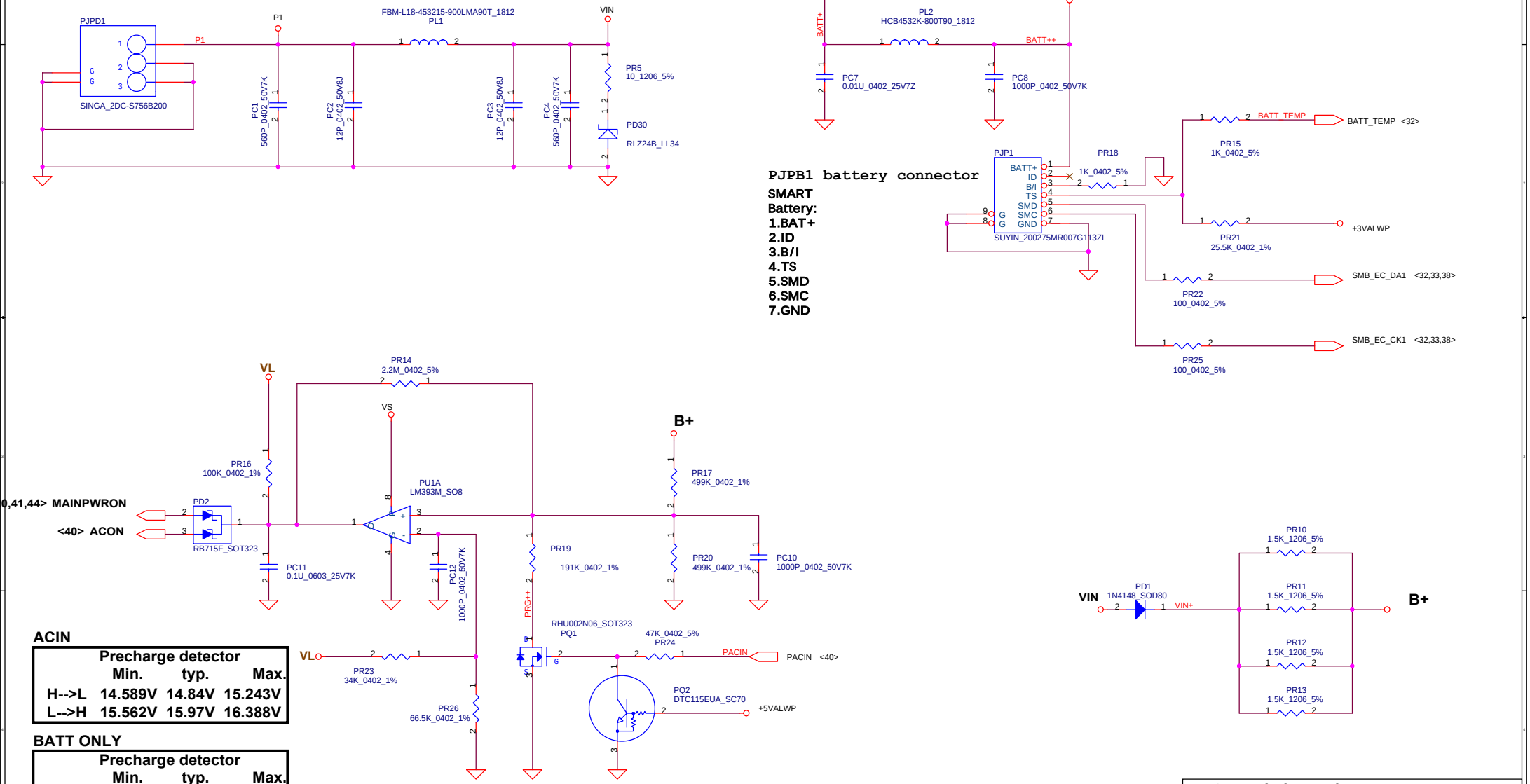

ACIN

Precharge detector	Min.	typ.	Max.
H-->L	14.589V	14.84V	15.243V
L-->H	15.562V	15.97V	16.388V

BATT ONLY

Precharge detector	Min.	typ.	Max.
H-->L	6.138V	6.214V	6.359V
L-->H	7.196V	7.349V	7.505V

THIS SHEET OF ENGINEERING DRAWING IS THE PROPRIETARY PROPERTY OF COMPAL ELECTRONICS, INC. AND CONTAINS CONFIDENTIAL AND TRADE SECRET INFORMATION. THIS SHEET MAY NOT BE TRANSFERRED FROM THE CUSTODY OF THE COMPETENT DIVISION OF R&D DEPARTMENT EXCEPT AS AUTHORIZED BY COMPAL ELECTRONICS, INC. NEITHER THIS SHEET NOR THE INFORMATION IT CONTAINS MAY BE USED BY OR DISCLOSED TO ANY THIRD PARTY WITHOUT PRIOR WRITTEN CONSENT OF COMPAL ELECTRONICS, INC.

Compal Electronics, Inc.

Title: DCIN & DETECTOR & Precharge

Size: B | Document Number: LA-2362 | Rev: 1

Date: Friday, March 11, 2005 | Sheet 39 of 52

Charger

Iadp=0~3A(65W)

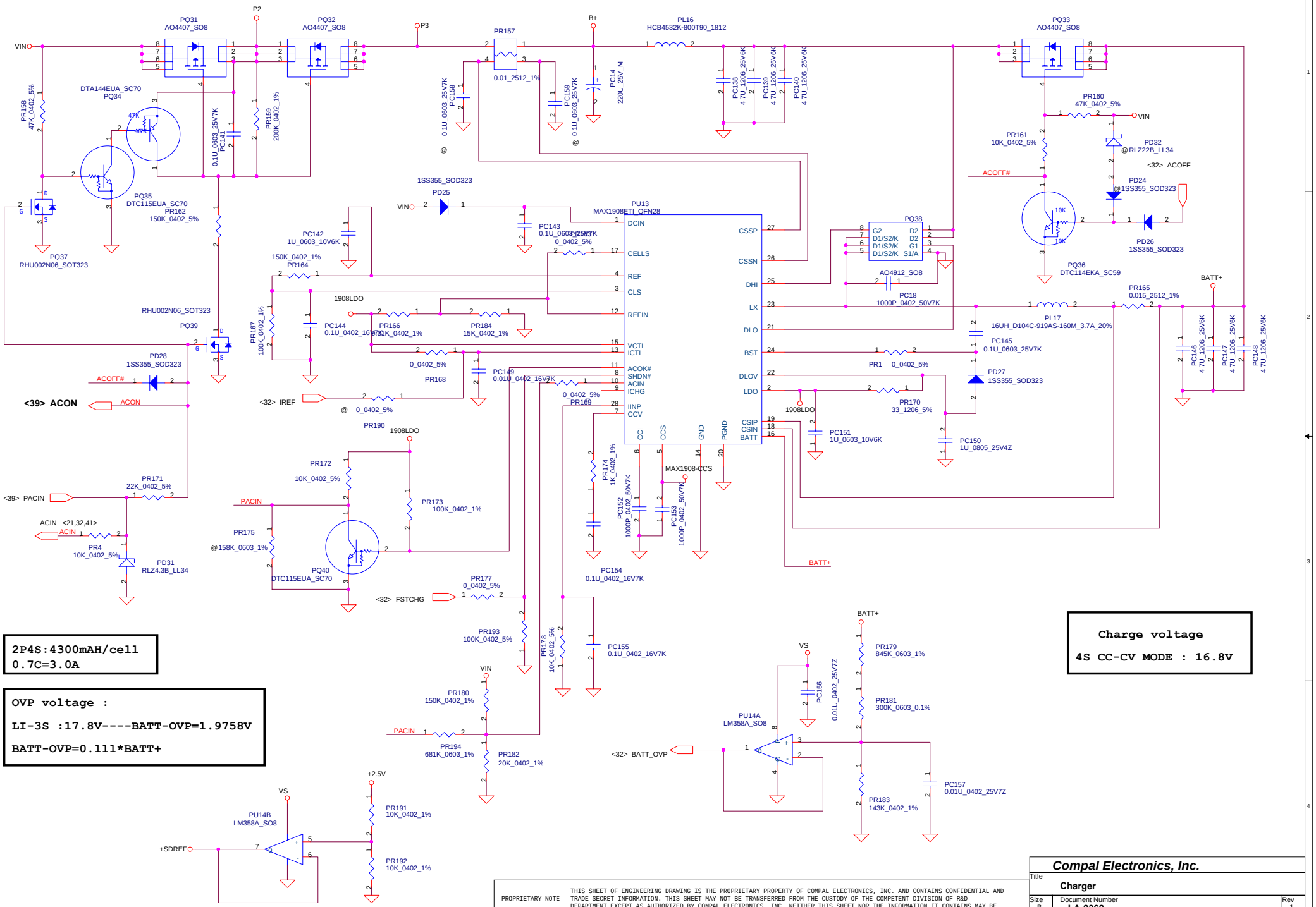

2P4S:4300mAH/cell
0.7C=3.0A

OVP voltage :

LI-3S :17.8V----BATT-OVP=1.9758V

BATT-OVP=0.111*BATT+

Charge voltage

4S CC-CV MODE : 16.8V

PROPRIETARY NOTE THIS SHEET OF ENGINEERING DRAWING IS THE PROPRIETARY PROPERTY OF COMPAL ELECTRONICS, INC. AND CONTAINS CONFIDENTIAL AND TRADE SECRET INFORMATION. THIS SHEET MAY NOT BE TRANSFERRED FROM THE CUSTODY OF THE COMPETENT DIVISION OF R&D DEPARTMENT EXCEPT AS AUTHORIZED BY COMPAL ELECTRONICS, INC. NEITHER THIS SHEET NOR THE INFORMATION IT CONTAINS MAY BE USED BY OR DISCLOSED TO ANY THIRD PARTY WITHOUT PRIOR WRITTEN CONSENT OF COMPAL ELECTRONICS, INC.

Compal Electronics, Inc.
Title: Charger
Size: B
Document Number: LA-2362
Rev: 1
Date: Friday, March 11, 2005
Sheet 40 of 52

+3.3V/+5V/+12V

+3VALWP Choke DCR = 26.5mΩ.
Current limit Threshold Min.=80 mV Mx.=120mV.
OCP Min.= 80mV/1.27K*(1.27K+1.27K)/26.6=6.038A
OCP Max.=120mV/1.27K*(1.27K+1.27K)/26.5=9.056A

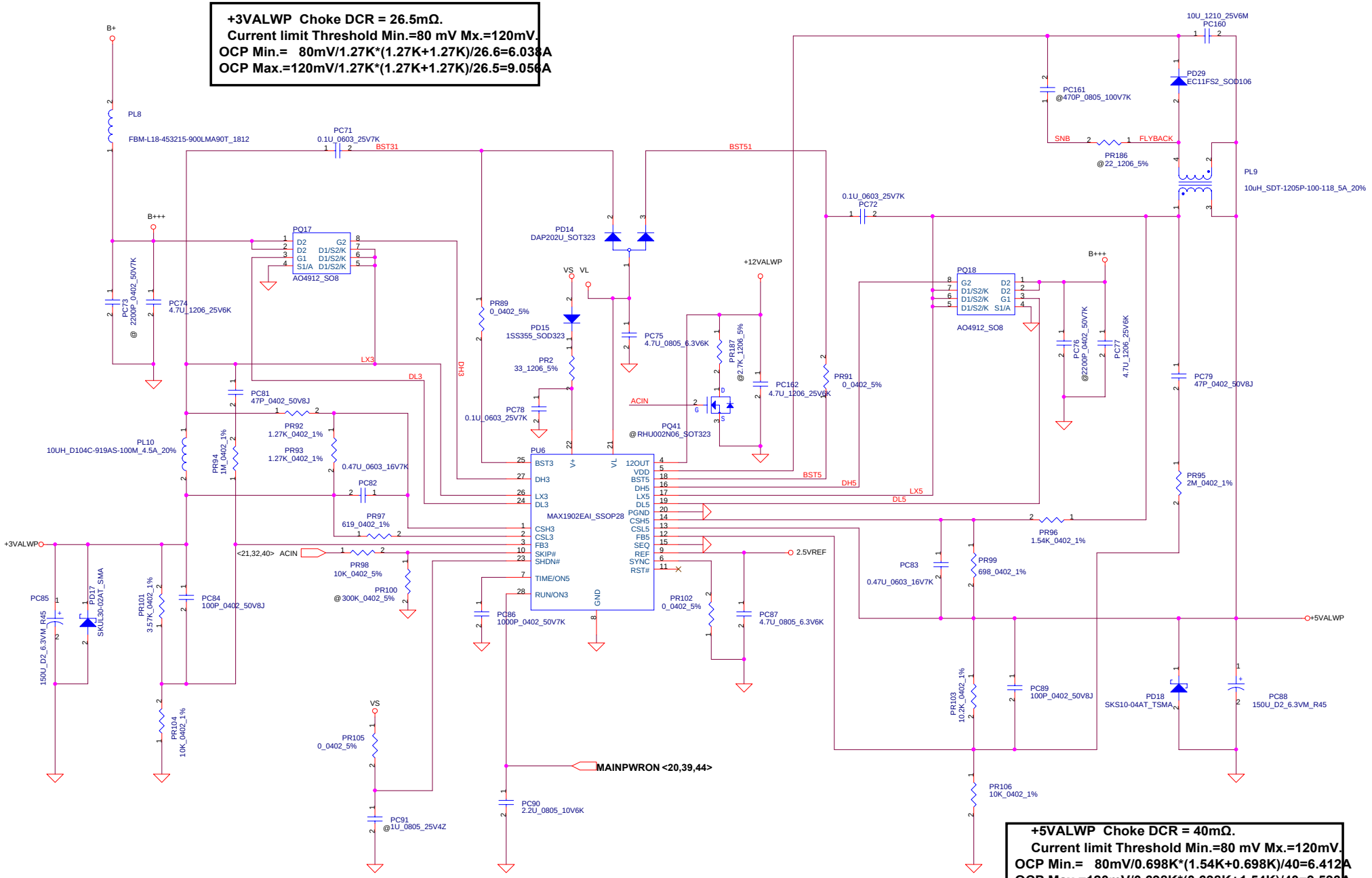

+5VALWP Choke DCR = 40mΩ.
Current limit Threshold Min.=80 mV Mx.=120mV.
OCP Min.= 80mV/0.698K*(1.54K+0.698K)/40=6.412A
OCP Max.=120mV/0.698K*(0.698K+1.54K)/40=9.593A

RS2(PR64)=RS1(PR58)*RS3(PR61)/(RS1+RS3)
L/RL(DCR)=RS1*RS3(PR61)/(RS1+RS3)*Cs(PC56)

THIS SHEET OF ENGINEERING DRAWING IS THE PROPRIETARY PROPERTY OF COMPAL ELECTRONICS, INC. AND CONTAINS CONFIDENTIAL AND TRADE SECRET INFORMATION. THIS SHEET MAY NOT BE TRANSFERED FROM THE CUSTODY OF THE COMPETENT DIVISION OR PERSON DEPARTMENT EXCEPT AS AUTHORIZED BY COMPAL ELECTRONICS, INC. NEITHER THIS SHEET NOR THE INFORMATION IT CONTAINS MAY BE USED BY OR DISCLOSED TO ANY THIRD PARTY WITHOUT PRIOR WRITTEN CONSENT OF COMPAL ELECTRONICS, INC.

Compal Electronics, Inc.	
Title	3.3V / 5V / 12V
Size	Document Number: 1A-2362
Rev	0.1
Date: Friday, March 11, 2005	Sheet 41 of 52

```
Vin=19V,Vo=2.5V,Io=4.5A,Fs=345KHZ,L=4.7UH
Mosfet Rds(on) tpy.=19.7mΩ Max=24mΩ,Delta I =0.6118A
Iimit=ILIM(V)/10/Rds(on)+1/2 delta I
Iimit Min=1.98V*100K/(100K+15K)/10/31.2mΩ+0.3059=5.824A
Iimit Max=2.02V*100K/(100K+15K)/10/19.7mΩ+0.3059=9.821A
+VCCPP = 5.824A ~ 9.821A
```

```
Vin=19V,Vo=2.5V,Io=4.5A,Fs=255KHZ,L=4.7UH
Mosfet Rds(on) tpy.=19.7mΩ Max=24mΩ,Delta I =1.8115A
Iimit=ILIM(V)/10/Rds(on)+1/2 delta I
Iimit Min=1.98V*100K/(100K+33K)/10/31.2mΩ+0.905=5.6765A
Iimit Max=2.02V*100K/(100K+33K)/10/19.7mΩ+0.905=8.614A
+2.5VP = 5.6765A ~ 8.614A
```

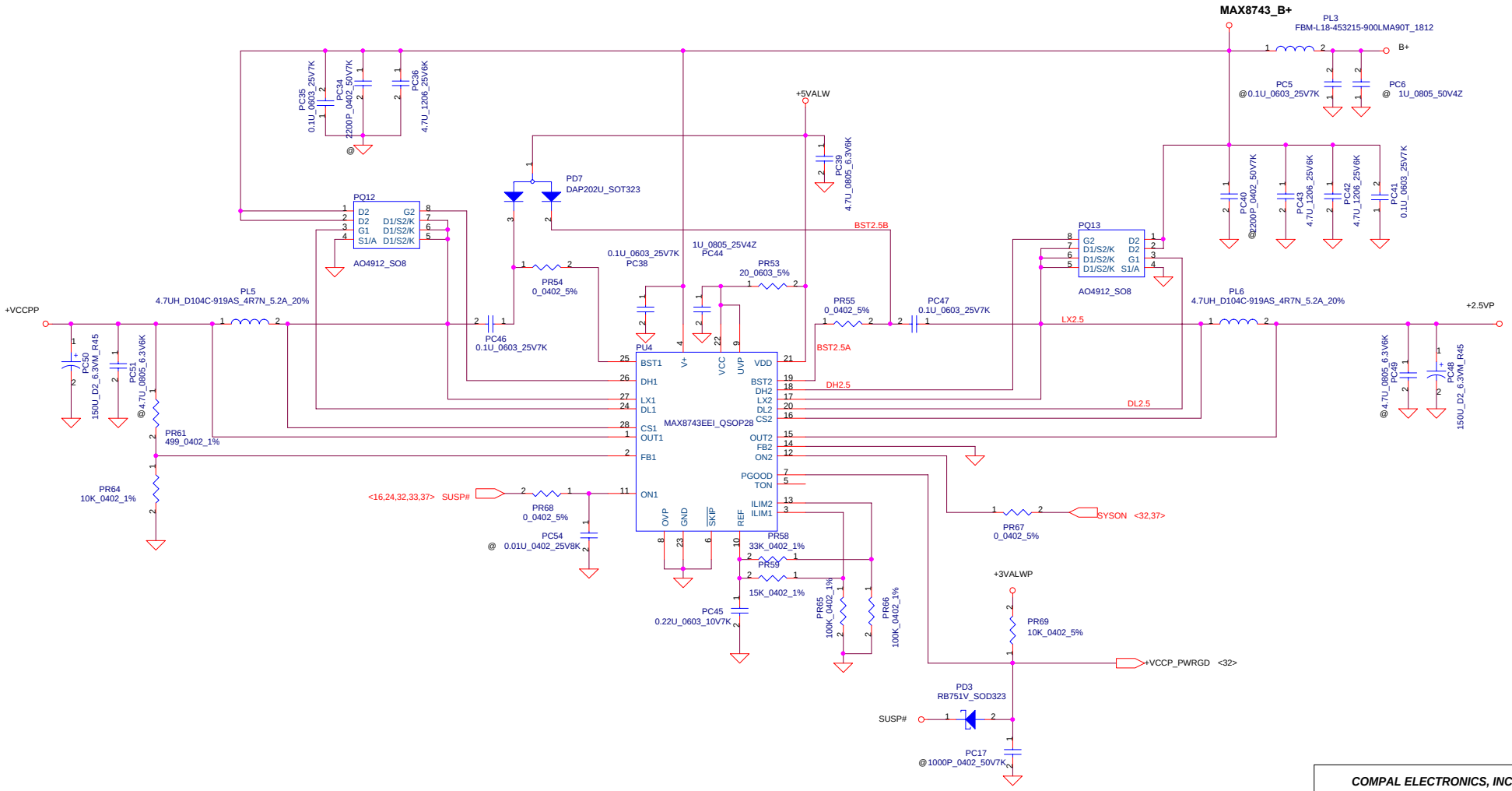

THIS SHEET OF ENGINEERING DRAWING IS THE PROPRIETARY PROPERTY OF COMPAL ELECTRONICS, INC. AND CONTAINS CONFIDENTIAL AND TRADE SECRET INFORMATION. THIS SHEET MAY NOT BE TRANSFERED FROM THE CUSTODY OF THE COMPETENT DIVISION OF R&D DEPARTMENT EXCEPT AS AUTHORIZED BY COMPAL ELECTRONICS, INC. NEITHER THIS SHEET NOR THE INFORMATION IT CONTAINS MAY BE USED BY OR DISCLOSED TO ANY THIRD PARTY WITHOUT PRIOR WRITTEN CONSENT OF COMPAL ELECTRONICS, INC.

COMPAL ELECTRONICS, INC	
Title	+2.5VP & +VCCPP
Size	Document Number LA-2362
Rev	1
Date: Friday, March 11, 2005	Sheet 42 of 52

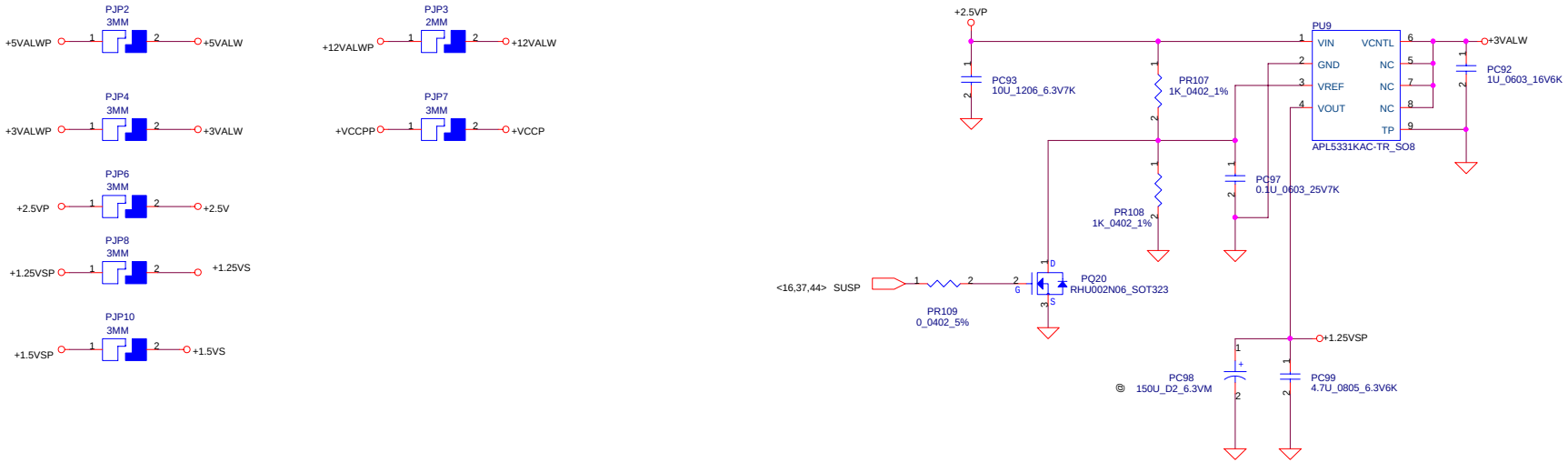

THIS SHEET OF ENGINEERING DRAWING IS THE PROPRIETARY PROPERTY OF COMPAL ELECTRONICS, INC. AND CONTAINS CONFIDENTIAL AND TRADE SECRET INFORMATION. THIS SHEET MAY NOT BE TRANSFERED FROM THE CUSTODY OF THE COMPETENT DIVISION OF R&D DEPARTMENT EXCEPT AS AUTHORIZED BY COMPAL ELECTRONICS, INC. NEITHER THIS SHEET NOR THE INFORMATION IT CONTAINS MAY BE USED BY OR DISCLOSED TO ANY THIRD PARTY WITHOUT PRIOR WRITTEN CONSENT OF COMPAL ELECTRONICS, INC.

Compal Electronics, Inc.

Title	**+1.25VSP**	
Size: A	Document Number: **LA-2362**	Rev: 1
Date: Friday, March 11, 2005	Sheet 43 of 52	

PH2 under CPU botten side :
CPU thermal protection at 80 degree C
Recovery at 44(45) degree C

```
Ipeak=Iocset*Rocset/RDS(ON)high side
Iocset=40uA, Pocset=4.12K RDS(on)=25.5mΩ
Ipeak min=40uA*4.12/(25.5*1.3)=4.97A
Ipeak max=40uA*4.12/25.5=6.46A
```

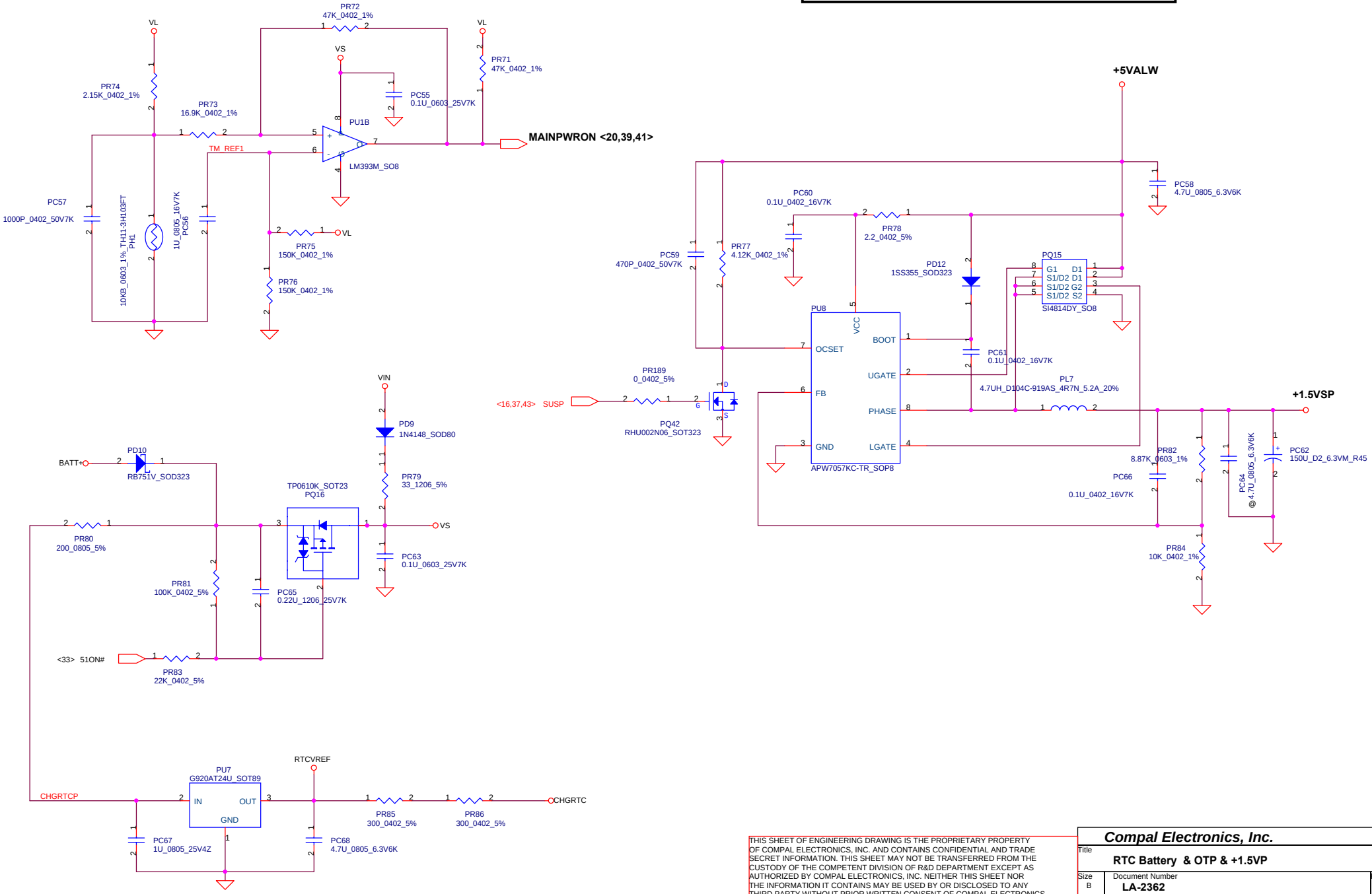

THIS SHEET OF ENGINEERING DRAWING IS THE PROPRIETARY PROPERTY OF COMPAL ELECTRONICS, INC. AND CONTAINS CONFIDENTIAL AND TRADE SECRET INFORMATION. THIS SHEET MAY NOT BE TRANSFERRED FROM THE CUSTODY OF THE COMPETENT DIVISION OF R&D DEPARTMENT EXCEPT AS AUTHORIZED BY COMPAL ELECTRONICS, INC. NEITHER THIS SHEET NOR THE INFORMATION IT CONTAINS MAY BE USED BY OR DISCLOSED TO ANY THIRD PARTY WITHOUT PRIOR WRITTEN CONSENT OF COMPAL ELECTRONICS, INC.

Compal Electronics, Inc.

Title	RTC Battery & OTP & +1.5VP	
Size B	Document Number LA-2362	Rev 1
Date: Friday, March 11, 2005	Sheet 44 of 52	

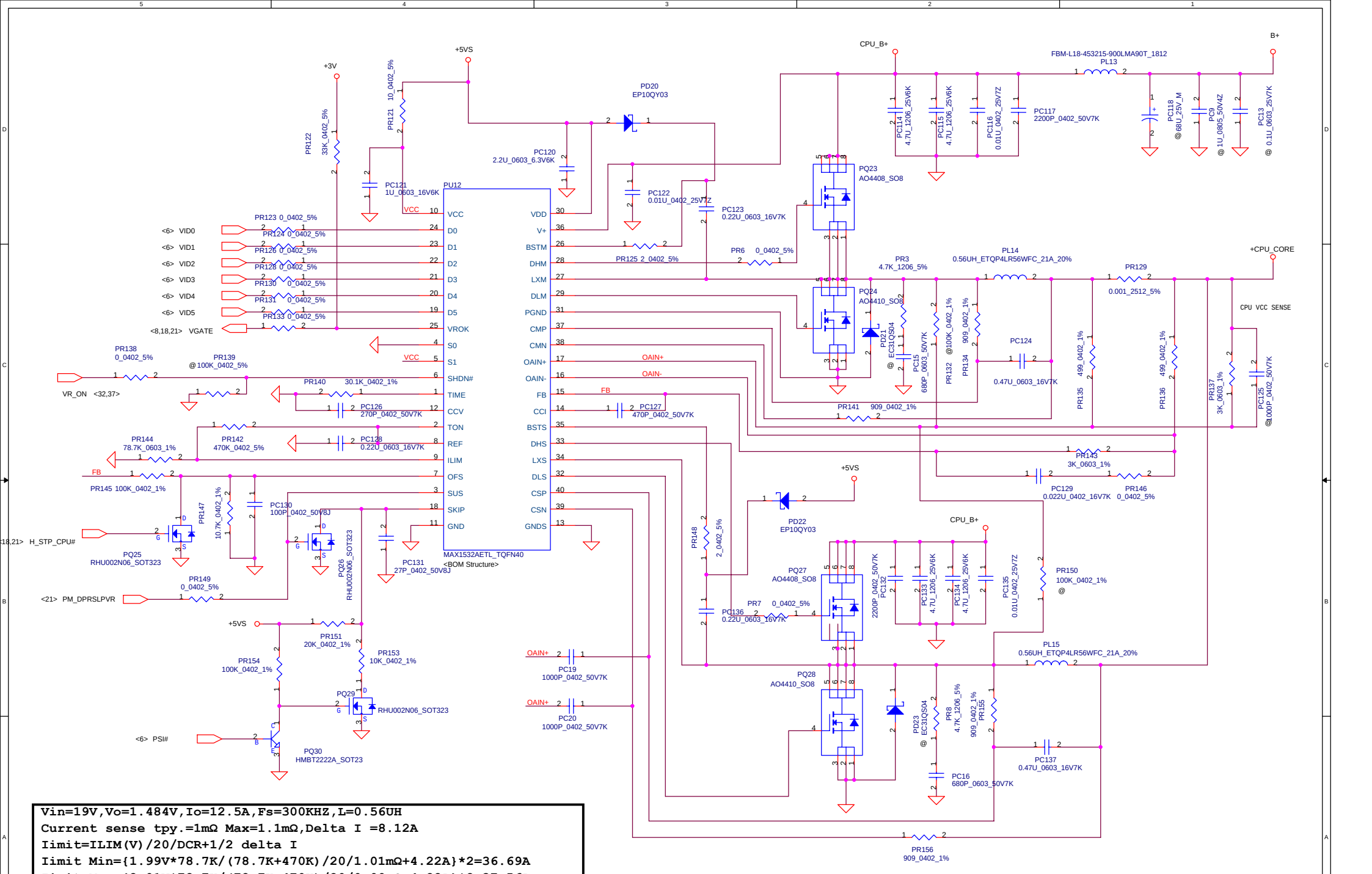

Vin=19V,Vo=1.484V,Io=12.5A,Fs=300KHZ,L=0.56UH
Current sense tpy.=1mΩ Max=1.1mΩ,Delta I =8.12A
Iimit=ILIM(V)/20/DCR+1/2 delta I
Iimit Min={1.99V*78.7K/(78.7K+470K)/20/1.01mΩ+4.22A}*2=36.69A
Iimit Max={2.01V*78.7K/(78.7K+470K)/20/0.99mΩ+4.22A}*2=37.56A

THIS SHEET OF ENGINEERING DRAWING IS THE PROPRIETARY PROPERTY OF COMPAL ELECTRONICS, INC. AND CONTAINS CONFIDENTIAL AND TRADE SECRET INFORMATION. THIS SHEET MAY NOT BE TRANSFERED FROM THE CUSTODY OF THE COMPETENT DIVISION OF R&D DEPARTMENT EXCEPT AS AUTHORIZED BY COMPAL ELECTRONICS, INC. NEITHER THIS SHEET NOR THE INFORMATION IT CONTAINS MAY BE USED BY OR DISCLOSED TO ANY THIRD PARTY WITHOUT PRIOR WRITTEN CONSENT OF COMPAL ELECTRONICS, INC.

Compal Electronics, Inc.

Title	+CPU_CORE	
Size: B	Document Number: LA-2362	Rev: 1
Date: Friday, March 11, 2005	Sheet 45 of 52	

Version change list (P.I.R. List)

Item	Fixed Issue	Reason for change	Rev.	PG#	Modify List	B.Ver#	Phase
1					ICH_PME# pull up +3VALW add R 10K	0.2	DVT
2					LID_SW# pull up +3VALW add R 10K	0.2	DVT
3					SB +1.5V regulator footprint error	0.2	DVT
4					SB +1.5V regulator footprint error U8 need to reverse	0.2	DVT
5					R76 take off	0.2	DVT
6					PR191 power plane 2.5vref change to +2.5V	0.2	DVT
7					R398 remove to R401	0.2	DVT
8					H_DPRSLP# add pull up to +vccp power plane POP R546	0.2	DVT
9					POP U9 for lose and foot print error	0.2	DVT
10					U3 pin6 & pin 7 need to swap	0.2	DVT
11					Add R476/7 40.2 Ohm for memory	0.2	DVT
12					R259 short	0.2	DVT
13					PR122 chang power plane to +3V for EC voltage leakage	0.2	DVT
14					Add R224/R290/R407 470ohm and Q34/9/11 2N7002	0.1	DVT-2
15					ADD R 39K//220p to GND at R518 for modify SIRQ	0.1	DVT-2
16					Reverse the JHP1 & JMIC1 Symble error	0.1	DVT-2
17					Modify NB FSB speed select for Dothan	0.1	DVT-2
18					Modify ACIN for SB	0.1	DVT-2
19					CardReader pin swap for flash memory	0.1	DVT-2
20					Reverse the JHP1 & JMIC1 Symbl	0.1	DVT-2
21					Add VCCP noise cap. at CPU C664/5/6/7/8/9 C670/1/2	0.2	DVT-3
22					Change R362/3 2.2K to 10K for Panel select	0.2	DVT-3

THIS SHEET OF ENGINEERING DRAWING IS THE PROPRIETARY PROPERTY OF COMPAL ELECTRONICS, INC. AND CONTAINS CONFIDENTIAL AND TRADE SECRET INFORMATION. THIS SHEET MAY NOT BE TRANSFERED FROM THE CUSTODY OF THE COMPETENT DIVISION OF R&D DEPARTMENT EXCEPT AS AUTHORIZED BY COMPAL ELECTRONICS, INC. NEITHER THIS SHEET NOR THE INFORMATION IT CONTAINS MAY BE USED BY OR DISCLOSED TO ANY THIRD PARTY WITHOUT PRIOR WRITTEN CONSENT OF COMPAL ELECTRONICS, INC.

Version change list (P.I.R. List)

Item	Fixed Issue	Reason for change	Rev.	PG#	Modify List	B.Ver#	Phase
23					Add C674/5/6/7/8 C680/1/2/3/4/5 C686/7/8/9 C690/1/2/3/4/5/6/7/8/9 C702/3 for NB VCCP noise cap.	0.2	DVT-3
24					ADD C646/7/8/9 C650/1/2/3/4/5 for DDR RAM 1.25V noise cap	0.2	DVT-3
25					ADD C704/5 for JVGAP1 2.5V for noise	0.2	DVT-3
26					Change R17/8/9 from 75 to 150 OHM for TV-out signal	0.2	DVT-3
27					ADD R774/5 for cost down U29 parts	0.2	DVT-3
28					Change SB(U5) sus power from V plane to Always power plane and R457 R69 R456 R455 R456 R451 U7.T2 +1.5VR	0.2	DVT-3
29					R154 remove for FIR function	0.2	DVT-3
30					ADD C656/7 C659/8 for +5VS HDD CDROM power noise	0.2	DVT-3
31					U9 replace the new package to RM8 and remove to TOP	0.2	DVT-3
32					ADD C706/7/8/9/10/11 for SB 1.5Vrun noise	0.2	DVT-3
33					R129 change to +5VALW	0.2	DVT-3
34					Q3 cahnge to AO3400 for current rating not enough	0.2	DVT-3
35					JMPCI1 P.24 change to +3V for wireless power	0.2	DVT-3
36					Remove KB910 & 39VF080 ROM	0.2	DVT-3
37					R705 change to 13K for MB ID	0.2	DVT-3
38					Change the Killer switch circuit for EC detect method then light on the LED	0.2	DVT-3
39					Move U32 to near NB	0.2	DVT-3
40					ADD 5VALW noise cap. C714/5/2/3,	0.2	DVT-3
41							
42							
43							
44							

THIS SHEET OF ENGINEERING DRAWING IS THE PROPRIETARY PROPERTY OF COMPAL ELECTRONICS, INC. AND CONTAINS CONFIDENTIAL AND TRADE SECRET INFORMATION. THIS SHEET MAY NOT BE TRANSFERED FROM THE CUSTODY OF THE COMPETENT DIVISION OF R&D DEPARTMENT EXCEPT AS AUTHORIZED BY COMPAL ELECTRONICS, INC. NEITHER THIS SHEET NOR THE INFORMATION IT CONTAINS MAY BE USED BY OR DISCLOSED TO ANY THIRD PARTY WITHOUT PRIOR WRITTEN CONSENT OF COMPAL ELECTRONICS, INC.

Version change list (P.I.R. List)

Item	Fixed Issue	Reason for change	Rev.	PG#	Modify List	B.Ver#	Phase
1	Delete the charge circuit.	Delete the charge circuit.	0.2	38	1.Delete the PU5 IC LM393M (SM). 2.Delete PD1 S DIO 1N4148 (SM). 3.Delete PR10,PR11,PR12,PR13 S RES 1/4W 1.5K +-5% 1206.	0.2	DVT
2	Change the CPU OTP circuit from active H to active L.	Change the CPU OTP circuit from active H to active L.	0.2	43	1.Delete PQ14 S TR DTC115EUA NPN (UMT3). 2..Delete PD8 S DIO 1SS355. 3.Change PR75 and PR76 from S RES 1/16W 100K +-1% 0402 to S RES 1/16W 150K +-1% 0402. 4.Change PR73 from S RES 1/16W 15K +-1% 0402 to S RES 1/16W 16.9K +-1% 0402. 5.Change PC56 from S CER CAP .22U 16V K X7R 0603 to S CER CAP 1U 16V K X7R 0805 6.Change PR74 from S RES 1/16W 3.4K +-1% 0402 to S S RES 1/16W 2.15K +-1% 0402.	0.2	DVT
3	For cost down solution.	To cost down for +1.5VP.	0.2	43	1.Change the PD12 from DIO 1N4148 (SM) to DIO 1SS355.	0.2	DVT
4	For cost down solution.	To cost down for RTC charge circuit..	0.2	43	1.Delete the PD33 S ZEN DIO RLZ4.3B (LL-34).	0.2	DVT
5	To prevent the KB-910 damag.	To prevent the KB-910 damag.	0.2	40	1.Change the PD17 from SCH DIO SKS10-04AT TSMA to SCH DIO SKUL30-02AT THIN SMA.	0.2	DVT
6	For cost down solution.	To cost down for +1.5VP for +12VALWP circuit.	0.2	40	1.Delete PR187 S RES 1/8W 2.7K +-5% 1206 S7.	0.2	DVT
7	For cost down solution.	To cost down for DDR 2.5V.	0.2	41	1.Delete PR62 S RES 1/16W 0 +-5% 0402.	0.2	DVT
8	For cost down solution.	To cost down for CPU_CORE.	0.2	44	1.Delete PR127 and PR152 S RES 1/16W 0 +-5% 0402.	0.2	DVT
9	For cost down solution.	To cost down for snubber circuit.	0.2	40	1.Deete PR127 and PR152 S RES 1/16W 0 +-5% 0402. 2.Delete the PC161 S CER CAP 470P 100V K X7R 0805.	0.2	DVT
10	For cost down solution.	To cost down for EMI capacitor.	0.2	39 40 41	1.Delete PC41,PC158 and PC159 S CER CAP .1U 25V K X7R 0603. 2.Delete PC40,PC73 and PC76 CER CAP 2200P 50V K X7R 0402.	0.2	DVT
10	Don't has pull high resister on VGATE pin.	Add pull high resister on VGATE pin.	0.2	44	1.Add the S RES 1/16W 100K +-5% 0402.	0.2	DVT
10	VCCPP output voltage has error.	Adjustment resistor divider.	0.2	41	1.Change the PR60 from S RES 1/16W 681 +-1% 0402 to S RES 1/16W 1.69K +-1% 0603.	0.2	DVT
11.	Choke Rating not enough for +1.5VP.	Choke Rating not enough for +1.5VP.	0.2	43	1.Change PL7 from 4.7UH_FDV0630-4.7UH_5.5A_20% to 4.7UH_D104C-919AS_4R7N_5.2A_20%.	0.2	DVT

THIS SHEET OF ENGINEERING DRAWING IS THE PROPRIETARY PROPERTY OF COMPAL ELECTRONICS, INC. AND CONTAINS CONFIDENTIAL AND TRADE SECRET INFORMATION. THIS SHEET MAY NOT BE TRANSFERED FROM THE CUSTODY OF THE COMPETENT DIVISION OF R&D DEPARTMENT EXCEPT AS AUTHORIZED BY COMPAL ELECTRONICS, INC. NEITHER THIS SHEET NOR THE INFORMATION IT CONTAINS MAY BE USED BY OR DISCLOSED TO ANY THIRD PARTY WITHOUT PRIOR WRITTEN CONSENT OF COMPAL ELECTRONICS, INC.

Version change list (P.I.R. List)

Item	Fixed Issue	Reason for change	Rev.	PG#	Modify List	B.Ver#	Phase
1	Don't has pull down resister on SHDN# pin for charger.	Add pull down resister on SHDN# pin.	0.2	39	1.Add PR193 the S RES 1/16W 100K +-5% 0402.	0.2	DVT
2	Change the Vin Detector from LM393 to charger ACOK#.	Change the Vin Detector from LM393 to charger ACOK#.	0.2	38,39	1.Add the PQ40 S TR DTC115EUA NPN (UMT3). 2.Delete the PR3,PR4,PR8 and PR9 RES 1/16W 10K +-1% 0402. 3.Add the PR193,PR172 and PR173 RES 1/16W 100K +-5% 0402. 4.Delete PR6 the S RES 1/16W 22K +-1% 0402. 5.Delete PR1 the S RES 1/16W 1M +-1% 0402. 6.Change PR182 from S RES 1/16W 150K +-1% 0402 to S S RES 1/16W 20K +-1% 0402. 7.Delete the PR7 S RES 1/16W 20K +-1% 0402. 8.Delete the PR2 S RES 1/16W 84.5K +-1% 0402. 9.Add the PR175 S RES 1/16W 158K +-1% 0402. 10.Add the PR175 S RES 1/16W 681K +-1% 0402. 11.Delete PC6 from S CER CAP .1U 25V K X7R 0603. 12..Delete PC5 from S CER CAP 1000P 50V +-10% X7R 0402.	0.2	DVT
3	For ACIN pin,	ACIN pin don't have connect to system.	0.2	39	1.Add PR4 the 10K +-5% 0402	0.2	DVT
4	+1.8VSP power rating not enough.	+1.8VSP power rating isnot enough.	0.2	42	1.Change PU10 from S IC G965-18P1U SOP-8L REG to S IC APW7057KC-TR SOP-8 PWM. 2.Add PR197 S RES 1/16W 12.7K +-1% 0402. 3.Add the PQ44 S TR RHU002N06 1N SOT323 4.Delete PQ43 the S TR AO4912 2N SO8 W/D 5.Add PD33 the S DIO 1SS355. 6.Add PR195 the S RES 1/16W 2.2 +-5% 0402 7.Add PR198 the S RES 1/16W 10K +-1% 0402. 8.Add PR196 the S RES 1/16W 4.12K +-1% 0402 9.Add the PC167 the S CER CAP 4.7U 10V Z Y5V 0805. 10.Add the PC164 S CER CAP 470P 50V +-10% X7R 0402. 11.Add the PC163,PC165 and PC168 S CER CAP .1U 16V +-10% X7R 0402 12.Delete PC96 the S CER CAP 10U 6.3V K X7R 1206. 13.Add the PC166 S POLY CAP 150U 6.3V M V(D2) T520 LESR. 14.Add PL18 the S COIL 5.0UH +-20% TPRH6D38-5R0M-N 2.9A.	0.2	DVT
5	VCCP's transients cannot meet spec.	VCCP's transients cannot meet spec.	0.2	41	1.Change PC50 from S POLY CAP 150U 6.3V M V(D2) T520 LESR to S POLY C 220U 4V M V(D2) T520 LESR. 2.Change PL6 from S COIL 4.7UH +-20% D104C-919AS-4R7M 5.2A to S COIL 1.8UH +-30% D104C-919AS-1R8N 9.5A.	0.2	DVT
6	For CPU_CORE's EMI,	For CPU_CORE's EMI,	0.2	44	1.Change the PR125 and PR148 from S RES 1/16W 0 +-5% 0402S to RES 1/16W 2 +-5% 0402.	0.2	DVT

THIS SHEET OF ENGINEERING DRAWING IS THE PROPRIETARY PROPERTY OF COMPAL ELECTRONICS, INC. AND CONTAINS CONFIDENTIAL AND TRADE SECRET INFORMATION. THIS SHEET MAY NOT BE TRANSFERED FROM THE CUSTODY OF THE COMPETENT DIVISION OF R&D DEPARTMENT EXCEPT AS AUTHORIZED BY COMPAL ELECTRONICS, INC. NEITHER THIS SHEET NOR THE INFORMATION IT CONTAINS MAY BE USED BY OR DISCLOSED TO ANY THIRD PARTY WITHOUT PRIOR WRITTEN CONSENT OF COMPAL ELECTRONICS, INC.

Version change list (P.I.R. List)

Item	Fixed Issue	Reason for change	Rev.	PG#	Modify List	B.Ver#	Phase
1.	CPU's transients cannot meet spec.	Add one current sense on phase 2.	0.2	44	1.Delete PC124 and PC137 the S CER CAP 0.47U 16V +-10% X7R 0603. 2.Delete PR134,PR141,PR155 and PR156 the S RES 1/16W 909+-1% 0402. 3.Add PR134 S RES 1W 0.01 +-1%2512.	0.2	DVT
2.	PACIN pin's high level is only 2.3V.	To adjust PACIN pin's level.	0.2	39	1.Delete PR175 the S RES 1/16W 158K+-1% 0402. 2.Change the PR172 from S RES 1/16W 100K +-1% 0402 S to RES 1/16W 10K +-1% 0402.	0.2	DVT
3.	The 5VALWP rising time is faster than PACIN's.	To delay timer of 5VALWP.	0.3	40	1.Change the PR105 from S RES 1/16W 47K +-1% 0402 S to RES 1/16W 100K +-1% 0402. 2.Change the PC91 from S CER CAP .047U 25V M X7R 0603 to CAP 1U 25V Z F Y5V 0805..	0.3	DVT2
4.	The charge has error on change mode.	To adjust input and output current regulation loop compensation.	0.3	39	1.Change PC152 and PC153 from the S CER CAP 0.01U 16V +-10% X7R to CER CAP 0.001U 16V +-10% X7R.	0.3	DVT2
5.	For cost down solution.	For cost down solution.	0.3	42 43	1.Change PC58,PC68,PC95 and PC99 from the S CER CAP 4.7U 25V K X5R 1206 to CAP 4.7U 10V K X7R 0805.	0.3	DVT2
6.	The charger has EMI issue.	Add a resistor on charger's boost for EMI.	0.3	39	1.Add the PR1 S RES 1/16W 0 +-5% 0402.	0.3	DVT2
7.	Change the current limit's from sense DRC to resister.	To adjust current limit point for CPU_CORE.	0.3	44	1.Change the PR142 from S RES 1/16W 200K +-5% 0402 to S RES 1/16W 470K +-5% 0402.	0.3	DVT2
8.	To preven in-rush current for B+ of MAX1902.	To preven in-rush current for B+ of MAX1902.	0.3	40	1.Add PR2 S RES 1/8W 33 +-5% 1206.	0.3	DVT2
9.	The CPU's dual choke will shortage.	Change to single choke.	0.3	44	1.Add PQ26 SB502060000 S TR RHU002N06 1N SOT323. 2.Add PR134,PR141,PR155,PR156 S RES 1/16W 909 +-1% 0402. 3.Delete PL14 S COIL .5UH +-30% CXZT1050-R50 28A. 4.Add the PL14,PL15 S COIL .56UH +-20% ETQP4LR56 WFC 21A. 5.Add the PC124,PC137 0.47U 16V +-10% X7R 0603 S8. 4.Add the PL14,PL15 S COIL .56UH +-20% ETQP4LR56 WFC 21A.	0.3	DVT2
10.	Delete the +1.8VSP on M/B.	Delete the +1.8VSP on M/B.	0.3	42	1.Delete the PU10 S IC APW7057KC-TR SOP-8 PWM. 2.Delete the PQ43 S TR AO4912 2N SO8 W/D. 3.Delete the PR188 S RES 1/16W 0 +-5% 0402. 4.Delete the PR195 S RES 1/16W 2.2 +-5% 0402 5.Delete the PR196 S RES 1/16W 4.12K +-1% 0402 6.Delete the PR198 S RES 1/16W 10K +-1% 0402 7.Delete the PR197 S RES 1/16W 12.7K +-1% 0402. 8.Delete the PL18 S COIL 5.0UH +-20% TPRH6D38-5R0M-N 2.9A. 9.Delete the PC166 S POLY CAP 150U 6.3V M V(D2) T520 LESR. 10.Change the PC75 and PC87 from S CER CAP 4.7U 10V Z Y5V 0805 to S CER CAP 4.7U 6.3V +-10% X5R 0805 11.Delete PC95 S CER CAP 4.7U 10V Z Y5V 0805. 12.Delete PC163,PC165,PC168 .1U 16V +-10% X7R 0402. 13.Delete PC164 S CER CAP 470P 50V +-10% X7R 0402. 14.Delete PD33 S DIO 1SS355.	0.3	DVT2

THIS SHEET OF ENGINEERING DRAWING IS THE PROPRIETARY PROPERTY OF COMPAL ELECTRONICS, INC. AND CONTAINS CONFIDENTIAL AND TRADE SECRET INFORMATION. THIS SHEET MAY NOT BE TRANSFERED FROM THE CUSTODY OF THE COMPETENT DIVISION OF R&D DEPARTMENT EXCEPT AS AUTHORIZED BY COMPAL ELECTRONICS, INC. NEITHER THIS SHEET NOR THE INFORMATION IT CONTAINS MAY BE USED BY OR DISCLOSED TO ANY THIRD PARTY WITHOUT PRIOR WRITTEN CONSENT OF COMPAL ELECTRONICS, INC.

Version change list (P.I.R. List)

Item	Fixed Issue	Reason for change	Rev.	PG#	Modify List	B.Ver#	Phase
1.	Max1902 protect When power cord fast plug-out and plug-in.	Add the pre-chagre circuit.	0.3	38	1.Add PQ1 SB502060000 S TR RHU002N06 1N SOT323. 2.Add PQ2 S TR DTC115EUA NPN (UMT3). 3.Add PD2 S SCH DIO RB715F UMD3. 4.Add PD1 S DIO 1N4148 (SM) 5.Add PR10,PR11,PR12 and PR13 S RES 1/4W 1.5K +-5% 1206. 6.Add PR16 S RES 1/16W 100K +-1% 0402. 7.Add PR17 and PR20 S RES 1/16W 499K +-1% 0402. 8.Add PR19 S RES 1/16W 191K +-1% 0402. 9.Add PR23 S RES 1/16W 34K +-1% 0402. 10.Add PR26 S RES 1/16W 66.5K +-1% 0402. 11.Add PR14 S RES 1/16W 2.2M +-5% 0402. 12.Add PR24 S RES 1/16W 47K +-5% 0402. 13.Add PC10 and PC12 S CER CAP 1000P 50V +-10% X7R 0402. 14.Add PC11 S CER CAP .1U 25V K X7R 0603.	0.3	DVT2
2.	The 5VALWP choke rating is not enough.	Change the choke.	0.3	40	1.Change the PL9 from S COIL 10UH +-30% SDT-1050P-100-118 3.5A to S COIL 10uH +-20% SDT-1205P-100-118.	0.3	DVT2
3.	TP0610T will EOL.	Change the part.	0.3	43	1.Change the PQ16 S TR TP0610T 1P SOT-23 to.S TR TP0610K 1P SOT-23	0.3	DVT2

THIS SHEET OF ENGINEERING DRAWING IS THE PROPRIETARY PROPERTY OF COMPAL ELECTRONICS, INC. AND CONTAINS CONFIDENTIAL AND TRADE SECRET INFORMATION. THIS SHEET MAY NOT BE TRANSFERED FROM THE CUSTODY OF THE COMPETENT DIVISION OF R&D DEPARTMENT EXCEPT AS AUTHORIZED BY COMPAL ELECTRONICS, INC. NEITHER THIS SHEET NOR THE INFORMATION IT CONTAINS MAY BE USED BY OR DISCLOSED TO ANY THIRD PARTY WITHOUT PRIOR WRITTEN CONSENT OF COMPAL ELECTRONICS, INC.

Version change list (P.I.R. List)

Item	Fixed Issue	Reason for change	Rev.	PG#	Modify List	B.Ver#	Phase
1.	To adjust sequence for +5VALWP and +3VALWP.	To adjust sequence for +5VALWP and +3VALWP.	LA-2362-0.2	41	1.Change PC90 from .47U 16V X7R 0603 to 2.2U 10V X5R 0805.	LA-2362-0.2	DVT3
2.	Change the pull-high resistor for VGTE pin.	For HW request.	LA-2362-0.2	45	1.Change PR122 from 100K 0402 to 10K 0402.	LA-2362-0.2	DVT3
3.	The system has re-boot issue when running the 3D mark.	The HW has noise by interference from B+.	LA-2362-0.2	42	1.Add the PL3 FBL-18-453215-900LM90T_1812. 2.Add the PC35 and PC41 0.1U 25V X7R 0603,	LA-2362-0.2	DVT3
4.	The CPU's B+ has nosie issue when system into C3/C4.	The CPU's B+ has nosie issue when system into C3/C4.	LA-2362-0.2	45	1.Add the PC14 220U 25V.	LA-2362-0.2	DVT3
5.	To cost down for 150uf/6.3V.	To cost down for 150uf/6.3V.	LA-2362-0.2	41,45	1.Change the vendor form KEMET to EPCOS.	LA-2362-0.2	DVT3
6.	Change the IC solution from ISL6227 to MAX8743 for +2.5V and +VCCPP.	The ISL6227 has shut down issue when windows idle.	LA-2362-0.2	42		LA-2362-0.2	DVT3

THIS SHEET OF ENGINEERING DRAWING IS THE PROPRIETARY PROPERTY OF COMPAL ELECTRONICS, INC. AND CONTAINS CONFIDENTIAL AND TRADE SECRET INFORMATION. THIS SHEET MAY NOT BE TRANSFERED FROM THE CUSTODY OF THE COMPETENT DIVISION OF R&D DEPARTMENT EXCEPT AS AUTHORIZED BY COMPAL ELECTRONICS, INC. NEITHER THIS SHEET NOR THE INFORMATION IT CONTAINS MAY BE USED BY OR DISCLOSED TO ANY THIRD PARTY WITHOUT PRIOR WRITTEN CONSENT OF COMPAL ELECTRONICS, INC.

www.s-manuals.com